IOM International Organization for Migration
OIM Organisation Internationale pour les Migrations
OIM Organización Internacional para las Migraciones

REQUEST FOR QUOTATION (RFQ)
AND
GENERAL INSTRUCTION TO CONTRACTORS (GIC)[1]

To : **Interested Contractors and construction Companies**

Project : IOM Mozambique supports to the **CONSTRUCTION OF 3 COMMUNITY CENTERS IN THE DISTRICT OF NAMUNO – CABO DELGADO PROVINCE**
RFQ Ref. RFQ/MOZ/JUN/2022/034
Date : 17-Jun-2022

The International Organization for Migration (IOM) is an intergovernmental organization established in 1951 and is committed to the principle that humane and orderly migration benefits both migrants and society. In the framework of IOM support communities with a large presence of un-or under-employed vulnerable groups (inclusive of youth) are engaged in social, political, and cultural revitalization, IOM invites interested eligible Contractors to submit financial and technical proposal for the ***Community Centers construction in Namuno district- Cabo Delgado Province,***

Site	Item Description	Quantity	Unit
Community Center construction			
1	***Chovera community Center – Namuno***	PSA	Work
2	***Ntsovo community Center – Namuno***	PSA	Work
3	***Pambara community Center – Namuno***	PSA	Work

***Please note that the BoQ and technical specifications of the works (Refer to BoQ sheet as a separate excels sheet- Annex B) can be subject to amendment after the award of the contract as per the technical specifications or findings on the ground.**

With this RFQ is the GIC which includes Instructions to Contractors, Technical Specifications, and administrative requirements that Contractors will need to follow in order to prepare and submit their quotation for consideration by IOM. IOM reserves the right to accept or reject any quotations, and to cancel the procurement process and reject all quotations at any time prior to award of Purchase Order or Contract, without thereby incurring any liability to the affected Contractor/s or any obligation to inform the affected Contractor/s of the ground for the IOM's action.

Very truly yours,
Monica Saidi
Procurement Staff/Focal Point

using a technology that has lower ecological footprints.

GENERAL INSTRUCTION TO CONTRACTORS (GIC)

1. General Instructions:

IOM request prospective Contractors to submit quotation for the implementation of **Community Center Construction in Chovera, Ntsovo, Pambara in Namuno district– Cabo Delgado – Mozambique.**

- The Selected contractor will be responsible to finalize the work in proper matter and should follow IOM Bill of quantity shared with this call for proposal and drawings.
- The contractor is responsible to supply all needed materials, equipment, manpower, and mobilize and demobilize all required resources, and to demolish any temporary constructed works in the location, that also includes but not limited to first aid kits, fire extinguisher, safety and security guards for the materials at the site...etc. and returning the site back to its original situation prior the project, this includes removing the rubbles and any remain materials including the digging remains.
- The contractor should be responsible in the location of the project for the safety and security of its staff, equipment, and materials, in line with the Mozambiquan working law.
- ***The contractor is responsible to hire at least 30% of the workers (youth) from the local community in addition to some youth from the resettlement site and to share the details with IOM for a proper monitoring, IOM may be able to assist in the worker selection process, but it's still the responsibility of the vendor to hire those workers for the whole period of the project and sharing all needed information with IOM.***

2. Summary:

District	Community	GPS	Comment
Namuno	**Chovera**	38.977721E; -13.541051S	
Namuno	**Ntsovo**	38.847564E; -13.521527S	
Namuno	**Pambara**	38.520175E; -13.781831S	

For more information, IOM is inviting all interested vendors to join in a call through teams using thislink on 27th of June at 14:00 Mozambique time, use this link to join LINK

2. Corrupt, Fraudulent and Coercive Practices

IOM requires that all IOM Staff, contractors, manufacturers, suppliers, or distributors, observe the highest stand of ethics during the procurement and execution of all contracts. IOM shall reject any proposal put forward by contractors, or where applicable terminate their contract, if it is determined that they have engaged in corrupt, fraudulent, collusive, or coercive practices. In pursuance of this policy, IOM defines for purposes of this paragraph the terms set forth below as follows:

- Corrupt practice means the offering, giving, receiving or soliciting, directly or indirectly, of anything of value to influence the action of the Procuring/Contracting Entity in the procurement process or in contract execution.

- Fraudulent practice is any act or omission, including a misrepresentation, that knowingly or

recklessly misleads, or attempts to mislead, the Procuring/Contracting Entity in the procurement process or the execution of a contract, to obtain a financial gain or other benefit to avoid an obligation.

- Collusive practice is an undisclosed arrangement between two or more contractors designed to artificially alter the results of the tender procedure to obtain a financial gain or other benefit.

- Coercive practice is impairing or harming, or threatening to impair or harm, directly or indirectly, any participant in the tender process to influence improperly its activities in a procurement process, or affect the execution of a contract

3. Conflict of Interest

A contractor found to have a conflicting interest to another contractor or in relation with the Procurement Entity shall be disqualified from participating in a tender. A contractor may be considered to have conflicting interest under any of the circumstances set forth below:

- A Contractor has controlling shareholders in common with another contractor.

- A Contractor receives or has received any direct or indirect subsidy from another Contractor.

- A Contractor has the same representative as that of another Contractor for purpose of this quotation.

- A Contractor has a relationship, directly or through their parties, that puts them in a position to have access to information about or influence on the Quotation of another or influence the decision of the Mission/procuring Entity regarding this Quotation process.

- A Contractor who participated as a consultant in the preparation of the design or technical specifications of the Goods and related services that are subject of the quotation.

4. Eligible Contractor

Only Contractors that are determined eligible shall be considered for award. The Contractor shall fill up and submit the standard IOM Vendor Information Sheet (VIS) (Annex C) to establish the Contractor's eligibility together with the Quotation. To qualify for award of the Contract, bidders shall meet the following minimum qualifying criteria
Note: all below criteria should be proofed by the applicant through the related documents.

(a) Annual volume of construction work of at least *USD 50,000.*

(b) Experience as prime contractor in the construction of at least *2 completed Works* of a nature and complexity equivalent to the Works over the last *3* years, to comply with this requirement, cost of works cited should be at least equivalent to *100% of* the estimated project cost and should be at least 70% complete. *A copy of a signed contract or acceptance application forms are required to proof these items.*

(c) Proposals for the timely acquisition (own, lease, hire, etc.) of the essential equipment needed to implement the work in timely manner, Reflected in Annex E attached below.

(d) A Contract Manager with three years' experience in works of an equivalent nature and volume, including no less than two years as Manager, and below are the other required elements of the team, Manager's CV should be attached in the application

(e) The Contractor must be registered in Mozambique as a construction company, the registration documents are mandatory to be attached with the application.

Please Note: if the vendor failed to meet the requirements listed above, it will be considered ineligible and no further evaluation to the quotation will be commenced.

5. Cost of Quotation Preparation

The Contractor shall bear all costs associated with the preparation and submission of his Quotation and IOM will not in any case be responsible and liable for the cost incurred.

6. Errors, omissions, inaccuracies, variations, and clarification in the Quotation Documents

The documents and forms requested for the purpose of soliciting Quotations shall form part of the Contract; hence care should be taken in completing these documents.

Contractors shall not be entitled to base any claims on errors, omissions, or inaccuracies made in the Quotation Documents. Contractors requiring any clarifications on the content of this document may notify the IOM in writing at the following address.

Email: procurementMoz@iom.int

IOM will respond to any request for clarification received on or before **29th of June 2022 – 05:00 PM**. Copies of the response including description of the clarification will be given to all Contractors who received this General Instruction, without identifying the source of the inquiry.

7. Confidentiality and Non-Disclosure

All information given in writing to or verbally shared with the Contractor in connection with this General Instruction is to be treated as strictly confidential. The Contractor shall not share or invoke such information to any third party without the prior written approval of IOM. This obligation shall continue after the procurement process has been completed whether the Contractor is successful.

1. IOM's Right to Accept any Quotation and to Reject all Quotations

IOM reserves the right to accept or reject any Quotation, and to cancel the procurement process

and reject all quotations submitted, at any time prior to award of contract, without thereby incurring any liability to the affected Contractor or Contractors or any obligation to inform the affected Contractor or Contractors of the ground for the IOM's action.

9. Requirements

9.1 Quotation Documents

The following shall constitute the Quotation Documents to be submitted by the Contractors :

1. **Quotation Form** *the cost should be including VAT* **(Annex A)**
2. **BOQ for one community center (Annex B)** *(the calculation will be applied for the total number of community centers)*
3. **Construction Schedule Form (Annex C)** *this will be blank and the vendor has to propose the work schedule.*
4. **Company Experience Form (Annex D)**
5. **Equipment Schedule Form (Annex E)** *it falls under eligibility criteria.*
6. **Labor force Form (Annex F)**

ALL ANNEXES SHOULD BE SIGNED BY THE VENDOR

9.2 Quotation Form

The Quotation Form (Annex A) and other required documents shall be duly signed and accomplished and typewritten or written in indelible ink. Any correction made to the prices, rates or to any other information shall be rewritten in indelible ink and initialed by the person signing the Quotation Form.

The language of the Quotations shall be in English, and prices shall be quoted in MZN exclusive of VAT, in the template of the BoQ.

Prices quoted by the Contractor shall be fixed during the Contractors performance of the contract and shall not be subjected to price escalation and variation on any account, unless otherwise approved by IOM. A submitted Quotation with an adjustable price quotation will be treated as non-responsive and will be rejected.

9.3 Validity of Quotation Price

Quotation shall remain valid for 90 calendar days after the deadline for quotation submission.

In exceptional circumstances, prior to expiry of the period of validity of quotations, IOM may request that the contractors extend the period of validity for a specified additional period. The request and the response thereto shall be made in writing. A contractor agreeing to the request will not be required or permitted to modify its quotation.

9.4 Documents Establishing Contractor's Eligibility and Qualification

The Contractor shall furnish, as part of its quotation, documents establishing the Contractors' eligibility to submit quotation and its qualifications to perform the contract if its quotation is accepted. The IOM's standard Vendors Information Sheet shall be used for this purpose

(Annex C). The documentary evidence of the Contractor's qualifications to perform the contract if its quotation is accepted shall be established to IOM's satisfaction:

(a) that the Contractor has the financial and technical capacity and track record necessary to perform the contract.
(b) that the Contractor meets other qualification criteria.

10. Submission of Quotations

Quotation must be submitted ***electronically only*** and shall be addressed to. **Procurement & Logistics Unit** *at:*

RFPMOZ@iom.int

On or before *3rd of July 2022 at 17:00hr*. Late[2] Quotations will not be accepted.

Quotations submitted by email must be limited to a maximum of 4 MB, virus-free and no more than 3 email transmissions. They must be free from any form of virus or corrupted contents, or the quotations shall be rejected.

11. Opening of Quotations

At the indicated time and place, the opening of Quotations shall be carried out by IOM without the presence of the Contractors because of the COVID-19. IOM reserve the right to conduct opening of Quotations in public or not.

12. Acceptance of Quotations

IOM is not bound to take an immediate decision on the acceptability or unacceptability of Quotations at the time of their opening.

13. Rejection of Quotations

Quotation can be rejected for the following reasons:

(a) The Quotation Form or any document which is part of the Quotation Document is not signed.
(b) the Contractor is currently under list of blacklisted Contractors.
(c) the Contractor offer imposes certain basic conditions unacceptable to IOM.
(d) the Quotation is not presented in accordance with this General Instruction.

IOM is not bound to accept any offer received and reserves the right to waive any minor defect in an offer, provided, however, that such minor defect (i) does not modify the substance of the offer and (ii) does not change the relative ranking of the Contractors.

14. Evaluation of Quotations:

The weight of the technical evaluation is 40% and the financial Evaluation is 60%.

A. Technical Evaluation:

Bids will be technically evaluated on a points' system for each single lot. Each bid will receive a percentage of the Total Points available in each category.

Bidders is considered responsive and can proceed to financial evaluation if it reaches minimum of 60 points and evaluated as Passed or Failed to proceed.

Each of the categories is detailed below:

1. **Time of full mobilization and hiring workers from the community – (0 to 10) Total points.**

   It's required by the interested vendors to submit the mobilization plan (starting upon signing the agreement), including the site verification and preparation also obtaining the needed approval tostart the work, this proposal plan is needed to understand the contractor methodology for the mobilization.

   Note: after the evaluation and the contractor selection an actual working plan to be provided.

2. **Time to Completion – (0 to 30) Total Points**

   This category is based on the proposed time to complete the project (based on the information provided in the construction schedule form- Annex C). Bids will be ranked according to the appropriate time for completion. Provide a detailed work plan for all activities required to complete. Duration of works cannot exceed Maximum **75 calendar days (more than 75 calendar days proposal the point will be Zero for this category)**, due to overall project deadline.

   The timeline will be evaluated by the committee and the points will be provided based on the realistic timeline for completing the work.

3. **Labors for the local targeted community: (0 to 20) total points**

   This Category is based on the proposed number of workers needed for this activity and the number of local people to be hired by the contractor to commence the work.

   As mentioned above the minimum percentage to hire a people from the community is 30% so the contractor who couldn't present the commitment to hire this percentage will have Zero points from this category, *(Annex F to be filled and signed)* ***If during the implementation the information reported in the tender documents are found to be untrue, the contracted company will be under question and penalty to be applied.***

4. **Relevant Experience in the same activities/geographical area - (0 to 20) Total Points**

   This category is based on the number and type of the previous relevant experience a Bidder has inthe various project activities and geographical area of the project (based on the information provided in the company experience form-Annex D). The Bidders will be ranked according to the relative amount of experience in the project activities, the Knowledge of the geographical area ofthe project, actual presence in the project area, equipment, tools, manpower, materials in the project area.

5. **The Recommendation letters submitted by the contractor from their previous projects (0 to 10 Points)**

   The category is based on the number of the recommendation letters (by the hiring party to the contractor to do similar projects) the calculation will be based on the amount of the project, location, and the date of it, more consideration to the contracts with IOM and UN agency.

6. **The Category of registration: (0 to 10 points)**

   The contractor should provide all needed legal and financial documents to proof that it has a legal registration in Mozambique (preferable to be in Cabo-Delgado specifically) , and the level of projects thatthey are eligible to apply for, based on the department of civil works evaluation (ALVARA)

The total points will be 100 and it will be considered as the technical Score (ST) of the contractor.

B. Financial Evaluation:

The lowest Financial Proposal (FI) shall be given a financial score (SF) of 100 points.
The financial scores (SF) of the other Financial Proposals shall be computed based on the formula:

SF= 100 x Fl / F Where:

SF - is the score of the Financial Proposal under consideration,
Fl - is the price of the lowest Financial Proposal,
F - is the price of the Financial Proposal under consideration.

The proposals shall then be ranked (Sc) according to their combined technical (St) and financial (SF) scores using the weights (T = the weight given to the Technical Proposal = 40; F = the weight given to the Financial Proposal = 60; >>> considering that T + F = 100)

Sc = ST x T% + SF x F%

The contractor achieving the highest combined technical and financial score (Sc) will be invited for negotiations.

15. Negotiations

The United Nations Commission on International Trade Law (UNCITRAL) arbitration rules will apply for any dispute, controversy or claim that will arise in relation to the procurement process.

16. Post Qualification

Prior to award, post-qualification will be carried out by IOM to further determine the selected Contractor's technical and financial capability to perform the contract. IOM shall verify and validate any documents/information submitted and shall conduct ocular inspection[3] of the office, plant and equipment and previous projects.

16. Award of Contract

The Contractor that has submitted the **lowest evaluated Price**, substantially responsive to the requirements of this General Instruction and who has been determined to be qualified to perform the contract shall be selected and awarded the contract.

IOM shall notify the selected Contractor through a Notice of Award. IOM shall also notify in writing, the other Contractors who were not selected without disclosing the reason for rejection.

17. Delivery Site and Period of Delivery

The works shall be done in ***Namuno District – Cabo Delgado Province (Chovera, Ntsovo, Pambara)***

The Works must be completed within ***60 calendar days*** after finalizing the mobilization and materials delivery.

18. Liquidated Damages

If the Contractor fails to deliver the works within the completion period specified in Clause 17 above, a penalty payment of 0.1% of the cost of unfinished Works for every day of breach of completion schedule will be requested.

19. Payment

Payment shall be made only upon IOM's acceptance of the Works, and upon IOM's receipt of invoice.

The initial installment will be as following:

- *50% of the agreed amount after 45 calendar days of work with the condition of finalizing not less than 50% of the total workload, with the approved work certificate by IOM engineering team.*
- *40% after 60 calendar days of the work with the condition of finalizing 100% of the work, with the approved work certificate by IOM engineering team.*
- *10% will be kept with IOM for retention as described in paragraph 20 below.*

Advance Payment will only be issued only under the condition of having Bank Guarantee, and equivalent to 10% of total amount of PO or USD 10,000 whichever is lower.

20. Retention Money

There will be retention of 10%, will be used as security for the quality of workmanship, conformance with plans and specifications, and third-party liabilities. Notwithstanding the provisions of the Contract, the 10% retention shall be released after the Contractor has complied with the requirements of the Certificate of Final Acceptance and the warranty period, **of 12 months.**

The Contractor has the option to substitute the cash retained with an acceptable Bank Guarantee of prescribed form in the same amount (Annex K).

21. Settlement of Dispute

The United Nations Commission on International Trade Law (UNCITRAL) arbitration rules will apply for any dispute, controversy or claim that will arise in relation to the procurement process.

Annex A

QUOTATION FORM

Date : _____

To : _____
_____
_____

Having examined the General Instruction for the Works of ***Construction of 3 community center ,*** the receipt of which is hereby duly acknowledge, I, representing ***[name of company]***. offer to execute the requested works in conformity with the General Instruction for the total LumpSum amount of ***[total bid amount in words and figures and currencies including VAT]*** inaccordance with the Priced Bill of Quantities which is herewith attached and form part of this Quotation.

I undertake if my offer is accepted, to deliver the Works in accordance with the Bill of Quantities, delivery schedule, plans and specifications.

I agree to abide by this Quotation for the Validity Period specified in the General Instruction which may be accepted at any time before the expiration of that period.

Until a formal contract is prepared and executed, this Quotation Form, together with your Notice of Award shall constitute a binding agreement between us.

I hereby certify that this Quotation complies with the requirements stipulated in the General Instruction.

Dated this_____day of_____20___.

_____ _____
[signature over printed name] *[in the capacity of]*

Duly authorized to sign Quotation for and on behalf of
_____ [*name of company*]

Annex B

BILL OF QUANTITIES FORM

PROJECT TITLE: ***Construction of 3 community center*** **in Chovera, Ntsovo, Pambara communities in Namuno District – Cabo Delgado – Mozambique.**
LOCATION: Chovera, Ntsovo, Pambara communities in Namuno District, Cabo Delgado province Mozambique

The cost should be total for the three community centers cost, and if the cost was for only one community center, then the calculation will be done multiplying it by the number of community centers in this RfQ

GRAND TOTAL in MZN including VAT	

See attached BoQ Excel file (Annex B)

_____
Contractors authorized signature over printed

Annex C

CONSTRUCTION SCHEDULE

Preferable be presented in MS Project format, using Gantt Chart (any other way to present the

A template sample is provided by IOM for your reference

The Contractor may use extra pages to furnish additional information or may use other acceptable format to illustrate the construction schedule.

_____

Contractors authorized signature over printed name [i]

Annex D

ANNEX-D COMPANY SIMILAR WORK EXPERIENCE

EXPERIENCE INFORMATION:

Only list of construction activities ALREADY IMPLEMENTED with special focus on **Date and location and construction** area: ***(The vendor can share their tables with the same details required) IOM reserve the right to contact the mentioned clients to ensure the correct information provided***

Name of your company: …… …

Project Description	Location	Donor (…….)	Work Duration	Cost of project	Date of completion

Name/Signature and Seal _____

Attached copy of contracts if not yet attached at the eligibility documents submitted.

We hereby certify that the above key supervisory staff is available for use in the execution of the contract.

_____

Contractors authorized signature over printed

Annex E

EQUIPMENT SCHEDULE

(to be used for the proposed project)

Please mention your plan to mobilize the needed equipment to finalize the work in the agreed timeline.

Type/description	Capacity	Age	Statues (own, lease, hire …etc)	Condition/Location
1				
2				
3				
4				
5				
6				
7				
8				
9				
10				
11				

We hereby certify that the above plant and equipment are available for use in the execution of the contract.

Contractors

_____

authorized signature over printed name

Annex F

LABOUR FORCE

Fill out this table with the labor force involved in the proposed project, please indicate the staffmobilization plan in the location to finalize the work in agreed timeline.

Note: consider this table only for the workers to be hired from the community, also you haveto consider as mentioned above 30% of the labors to be hired from the local community, andupon your signature this form will be considered for the eligibility and marks as well,

If you don't have the list of workers to be hired from the community ready yet, you must provide the estimation, and the list of those workers will be verified during the implementation.

Position Description	Workers statues (Returnees, IDPs)	Gender (male, female)	Number of positions	Main tasks and skills' needed	Number of days to work in the project

Name/Signature and Seal _____

A sample of the work plan to be submitted by the vendor

Client: International Organization for Migration (IOM)
Work:
Local:
Date: June 17 2022

International Organization for Migration (IOM)
The UN Migration Agency

WORK PLAN / PLANO DE TRABALHO

Art.	Description of Activities	Descricao das Actividades	Duration/ Duracao (Nr. Days)	Weeks/ Calendary Days — Week/Semana 1	Week/Semana 2	Week/Semana 3	Week/Semana 4	Week/Semana 5	Week/Semana 6	Week/Semana 7	Week/Semana 8
1											
2											
3											
4											
5											
6											
0											
1											
1.1											
1.2											
2											
2.1											
2.2											
2.3											
2.4											
3											
3.1											
4											
4.1											
4.2											
5											
5.1											

Client: International Organization for Migration (IOM) / Organização Internacional para as Migrações (OIM)

Work: Construction a standarized Community Center / Construção de um Centro Comunitário Standarizado

Local: Nstovo - Namuno - Cabo Delegado

Date: May 12, 2022

International Organization for Migration (IOM)
The UN Migration Agency

SUMMARY OF BUDGET

SECTION	DESCRIPTION	DESCRICAO	TOTAL AMMOUNT (MZM)	TOTAL AMMOUNT (USD)
CHAP 01	PRELIMINARIES (EARTHWORKS & FOUNDATIONS)	PRELIMINARES (MOVIMENTO DE TERRA & FUNDACAO)	0.00	
CHAP 02	PAVEMENTS FLOOR	PAVIMENTO	0.00	
CHAP 03	EXTERNAL & INTERNAL WALLS	PAREDES EXTERNAS E INTERNAS	0.00	
CHAP 04	ROOFING	COBERTURA	0.00	
CHAP 05	PAVEMENTS AND WALL FINISHES	ACABAMENTO DE PAVIMENTO E PAREDES	0.00	
CHAP 06	CARPENTRY	CARPINTARIA	0.00	
CHAP 07	ELECTRICITY	ELECTRICIDADE	0.00	
TOTAL			**0.00**	USD 0.00
VAT(17%)			*0.00*	
TOTAL AMOUNT			**0.00**	**USD 0.00**

Art.	Description of Activities	Descrição das Actividades	UN	QTY	Cost Estimate Unit.	Cost Estimate Total
	VERY IMPORTANT NOTE: **The cost mentioned in the BoQ should always include all related works (Mobilization, demobilization, Hiring technician staff and applying HSST protocols for safety and Security, with a First Aid kit to be at the site, also this should be considered for the temporary fencing, fire Extinguishers, work plate, and hiring the needed equipment on timely basis)**	**NOTA MUITO IMPORTANTE:** **O custo mencionado no MQ deve sempre incluir todos os trabalhos relacionados (Mobilização, desmobilização, Contratação de pessoal técnico e aplicação dos protocolos HSST de segurança e protecção, com um kit de primeiros socorros a estar no local, também isto deve ser considerado para as vedações temporárias, Extintores de incêndio, placa de obra e contratação atempada do equipamento necessário)**				
CHAP 01	**PRELIMINARIES (EARTHWORKS & FOUNDATIONS)**	**PRELIMINARES (MOVIMENTO DE TERRA & FUNDACAO)**			**Insert your cost proposal**	
1.1	Excavation and backfill in foundation trenches, 400mm wide, depth > 850mm, including watering and compaction of the foundation beds and backfilling shall be done as instructed by the site engineer and in layers not more than 200mm thick and well compacted with earth compactor or compactor (95% AASTHO). Transport for surplus waste material, if required, should be included.	Escavação e aterro em valas de fundação, com largura de 400mm, profundidade > 850mm, incluindo rega e compactação dos leitos das fundações e o enchimento de fundo deve ser feito de acordo com as instruções do engenheiro do local e em camadas não superiores a 200mm de espessura e bem compactado com compactador de terra ou compactador (95% AASTHO). O transporte para os resíduos de material excedente, se necessário, deve ser incluído.	m³	**14.03**		MZN -
1.2	Anti-termite treatment, with a 10-year guarantee, whose certificate must be shared by the contractor.	Tratamento anti-térmites, com garantia de 10 anos, cujo o certificado devera ser partilhado pelo empreteiro.	m²	**116.44**		MZN -
1.3	Providing and laying of 100mm of rockfill in median stones at the base of foundation…(cb meter)	Fornecimento e aplicação de 100 mm de enrocamento em pedra mediana em base de fundações.	m³	**1.65**		MZN -
1.4	Providing & Laying of Lean Concrete (Class B15) 50mm thick in underneath foundation …(cb meter)	Betao vibrado de classe B15 para Betao de limpeza com 50mm de espessura	m³	**0.83**		MZN -
1.5	Supply and placement of simple B25 concrete in the foundation footings, including all necessary works	Fornecimento e colocação de Betão simples B25 nas sapatas de fundacao, incluindo todos os trabalhos necessários				
1.5.1	Concrete …(cb meter) (300x300x1100mm)x15 foundation footings	Betao (300x300x1000mm)x15 sapatas	m³	**1.35**		MZN -
1.6	Providing and laying of 200mm foundation walls with filled cement/concrete blocks, C.M. 1:5, including all necessary and complementary works. …(sq meter)	Fornecimento e assentamento de paredes de 400x200x200mm em blocos macissados, assentes com argamassa de cimento e areia ao traço 1:5 'incluindo todos os trabalhos complementares	m²	**30.00**		MZN -
	Sub-total of Earthworks & Foundations	***Sub-total de Movimento de Terra e Fundações***				***MZN -***
CHAP 02	**PAVEMENTS FLOOR**	**PAVIMENTO**				
2.1	Providing and laying of 100mm of rockfill in median stones at the pavements, with the compacting, dimentions of (19~38mm)	Fornecimento e colocação de 100mm de enrocamento, brita mediana na caixa de pavimento, com a compactação, dimensões de (19~38mm)	m³	**11.53**		MZN -

2.2	Supply and assembling of plastic screen, GLUNPLUS USB GREEN or HYPERLASTIC ORANGE, 250 microns thickness	Fornecimento e montagem de membranda de polietileno/tela plástica, GLUNPLUS USB GREEN ou HYPERLASTIC ORANGE, 250 microns de espessura, para impermeabilizacao.	m²	116.44		MZN -
2.3	Providing and aplication of electrowelded mesh ref.AR75 300X300X60 mm, for ground floor slab, including chocks spacers, knotting wire, folds, hooks, splices, waste, and all necessary works and materials.	Fornecimento e aplicação de malha electrosoldada ref.AR75 300X300X60, para laje de pavimento, incluindo espaçadores de calços, arame de atar, dobras, ganchos, emendas, sobreposições, e todos os trabalhos e materiais necessários.	m²	116.44		MZN -
2.4	Supply and placement of concrete B25, including all the necessary works for the construction of pavement slab with 100mm thickness	Fornecimento e colocação de betão B25, incluindo todas as obras necessárias para a construção de laje de pavimento com 100mm de espessura	m³	11.64		MZN -
	Sub-total of Pavement Floor	***Sub-total do Pavimento***				***MZN -***
CHAP 03	**EXTERNAL & INTERNAL WALLS**	**PAREDES INTERNAS & EXTERNAS**				
3.1	Providing and laying of 200x150x400mm masonry of hollow blocks, in external walls, laid with cement mortar and sand; including all necessary and complementary works. …(sq meter)	Fornecimento e assentamento de alvenarias em blocos vazados de cimento e areia com 400x200x150mm, em paredes, assentes com argamassa de cimento e areia	m²	83.10		MZN -
3.3	Supply and placement of B25 reinforced concrete in the pillars, including all the necessary work (cutting, shaping, placement and assembly of reinforcement in A400 NR steel bars, including shims, tying wire, bends, hooks, splices, overlaps, waste)	Fornecimento e colocação de Betão armado B25 nos pilares, incluindo todos os trabalhos necessários (corte, moldagem, colocação e montagem de armaduras em varão de aço A400 NR, incluindo calços, arame de atar, dobras, ganchos, empalmes, sobreposições, desperdícios)				
3.3.1	Concrete …(cb meter) (200x200x3100mm)x6	Betao (200x200x4100mm)x6	m³	0.98		MZN -
3.3.2	Ø6 …(kg) (pillar)	Ø6 (pilar)	kg	36.91		MZN -
3.3.3	Ø10 …(kg) (pillar)	Ø10 (pilar)	kg	66.62		MZN -
3.4	Supply and placement of circular wooden pillars (treated with carbolim, creosote or similar), with dimensions of 4500mm high, diameter between 150 and 160mm, with metal supports for fixing to the foundation base according to the drawings, including all the necessary work for fixing and anchoring in the mortared area.	Fornecimento e colocação de pilares circulares em madeira (tratada com carbolim, creosoto ou similar), com dimensoes de 4500mm de altura, diametro entre 150 a 160mm, com suportes metalicos para fixacao a base de fundacao segundo os desenhos, incluindo todos os trabalhos necessarios para a fixacao e ancoragem na zona argamassada.	each	9.00		MZN -
3.5	Wooden beam (pine or similar), 150x75mm/150x70mm section, well worked, with opposing joints inside the eucalyptus pillars anchored with a 12mm or 16mm diameter threaded screw. (The unit is 6000mm long)	Viga em Madeira (Pinho ou similar), seccao 150x75mm/150x70mm, bem trabalhado, com juntas contrapostas no interior dos pilares em eucalipto ancorados com parafuso roscado diamentro 12mm ou 16mm. (A unidade tem 6000 m de comprimento)	un	6.00		MZN -
3.6	Supply and placement of B25 reinforced concrete in the corroding beams, including all the necessary work (cutting, shaping, placement and assembly of reinforcement in A400 NR steel bars, including shims, tying wire, bends, hooks, impalement, overlaps, waste)	Fornecimento e colocação de Betão armado B25 nas vigas de corroamento, incluindo todos os trabalhos necessários (corte, moldagem, colocação e montagem de armaduras em varão de aço A400 NR, incluindo calços, arame de atar, dobras, ganchos, empalmes, sobreposições, desperdícios)				
3.6.1	Concrete …(cb meter) (200x200x25750mm)	Betao (200x200x25750mm)	m³	1.02		MZN -
3.6.2	Ø12 …(kg)	Ø12	kg	101.80		MZN -
3.6.3	Ø6 …(kg)	Ø6	kg	26.62		MZN -
	Sub-total of External & Internal Walls	***Sub-total de Paredes Externas e Internas***				***MZN -***
CHAP 04	**ROOFING**	**COBERTURA**				
4.1	Supply and laying of wood truss, 150x50mm section. Includes assembly, connections (metalic and nails/screws) and painting (two coats of creosote), according to the structural project	Fornecimento e assentamento de treliça em madeira, de seccao 150x50mm. Inclui montagem, conexões (metalicas e pregos/parafusos) e pintura (duas camadas de creosoto), de acordo com o projeto estrutural	each	6.00		MZN -
4.2	Supply and laying of wooden purlins (50x75mm). Including assembly, connections (metal and nails/screws) and painting (two coats of creosote).	Fornecimento e assentamento de madres de madeiraa (50x75mm). Incluindo montagem, conexões (metalicas e pregos/parafusos) e pintura (duas camadas de creosoto).	ml	183.60		MZN -
4.3	Providing and laying of IBR 686 Chromadeck sheet with 0.6mm, including all fixing elements, according to the manufacturer's recommendations. i=15°…(sq meter)	Fornecimento e assentamento de chapa de cobertura IBR 686 Chromadeck com 0.6mm, incluindo todos elementos de fixação conforme as recomendações do fabricante, i=15°	m²	177.48		MZN -
4.4	Providing and laying Ridge in IBR 686 Chromadeck 0,6mm sheet …(meter)	Fornecimento e assentamento de Cumeeira em chapa IBR686 Chromadeck 0,6mm.	ml	15.30		MZN -
	Sub-total of Roofing	***Sub-total de Cobertura***				***MZN -***
CHAP 05	**PAVEMENTS AND WALL FINISHES**	**ACABAMENTO DE PAVIMENTO E PAREDES**				
	Plastering on walls	Reboco em paredes				
5.1	Execution of 2.5cm thick plaster on walls, columns, and beams, properly leveled with cement mortar and sand to the mix design line 1:4; including roughcast with cement mortar and sand 1:3. …(sq meter)	Execução de reboco com 2.5cm de espessura em paredes, pilares e vigas devidamente regularizado com argamassa de cimento e areia ao traço 1:4, incluindo chapiscos com argamassa de cimento e areia ao traço 1:3.	m²	83.53		MZN -
	Floor Finishes	Acabamentos em Pavimento				
5.2	Execution of concrete (20mm) stroked and quartered, on indoor floor, with cement mortar and sand, in the line 1:4 …(sq meter)	Execução de betonilha (20 mm) interios afagada e esquartelada em pavimento exterior, com argamassa de cimento e areia ao traço 1:4	m³	11.64		MZN -
	Paintings	Pinturas				
5.4	Painting of external walls with two coats of top quality Exterior Plastic paint (from the CIN, PLASCON or NEUCE brand) preceded by preparation of the undercoated wall, in a color to be chosen by the Owner. Including all surface preparation activities. …(sq meter). Practical spread rate: 4-6 m²/L per coat	Pintura de paredes exteriores a duas demãos de tinta Plástica Exterior de primeira qualidade (da marca CIN), antecedida de preparação da parede com subcapa, de cor a escolher pelo Dono da Obra. Incluindo todas as actividades de preparacão das superfícies. Rendimento prático: 4-6 m²/L por demão	m²	83.53		MZN -
5.5	Painting of external walls with two coats of top quality Exterior Plastic paint (from the CIN, PLASCON or NEUCE brand) preceded by preparation of the undercoated wall, in a color to be chosen by the Owner. Including all surface preparation activities. …(sq meter). Practical spread rate: 4-6 m²/L per coat	Pintura de paredes interiores a duas demãos de tinta Plástica Exterior de primeira qualidade (da marca CIN, PLASCON ou NEUCE), antecedida de preparação da parede com subcapa, de cor a escolher pelo Dono da Obra. Incluindo todas as actividades de preparacão das superficies.Rendimento prático:4-6 m²/L por demão.	m²	83.53		MZN -
	Sub-total of Pavements & Wall Finishes	***Sub-total de Acabamentos de Pavimentos e Parede***				***MZN -***
CHAP 06	**CARPENTRY**	**CARPINTARIA**				
6.1	Supply and assembling chanfuta wooden windows, including all fixing acessories, and all works for good finishing	Fornecimento e montagem de janelas de madeira chanfuta, incluindo todos os acessórios de fixação, e todos os trabalhos para um bom acabamento:				
6,1,1	W1 (1,70x1,10)	J1 (1,70x1,10)	un	2.00		MZN -
6.1.2	W2 (0,75x0,60)	J2 (0,75x0,60)	un	2.00		MZN -
6.2	Providing and fixing varnished chamfuta wooden doors; including all acessories, door fittings and jambs, according to the spans map and/or manufacturer's recommendations.	Fornecimento e Assentamento de portas de madeira Chanfuta envernizada, incluindo todos acessorios e ferragens, batentes de acordo com o Mapa de Vãos e recomendações do fabricante.				
6.2.1	D1 (0.9x2.10) …(each)	P1 (0.9x2.10)	each	2.00		MZN -
	Sub-total of Carpentry	***Sub-total de Carpintaria***				***MZN -***
CHAP 07	**ELECTRICITY**	**ELECTRICIDADE**				
	Solar lights	Iluminacoes Solares				
7.1	Supply and assembling of solar lights; including all necessary acessories, fixings and conections and complementary works and materials, with 50W of power	Fornecimento e montagem de luzes solares; incluindo todos os acessórios necessários, fixações e ligações e trabalhos e materiais complementares, com 50W de potência	un	4.00		0.00
	Sub-total of Electricity	***Sub-total de Electricidade***				***MZN -***
Total Ammount for Administrative Building						**MZN -**

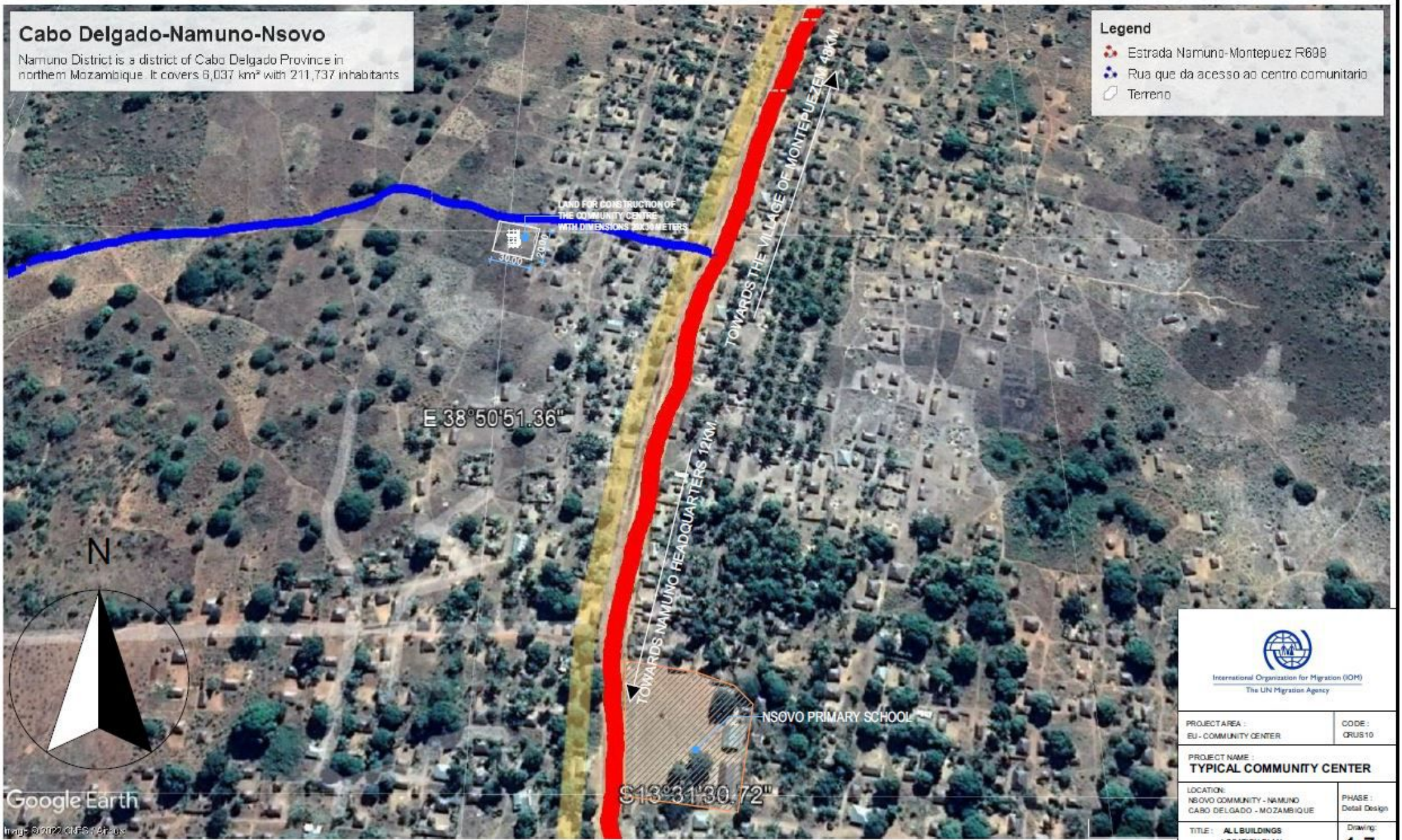

International Organization for Migration (IOM)
The UN Migration Agency

PROJECT AREA : EU - COMMUNITY CENTER	CODE : CRUS10

PROJECT NAME :
TYPICAL COMMUNITY CENTER

LOCATION: NSOVO COMMUNITY - NAMUNO CABO DELGADO - MOZAMBIQUE	PHASE : Detail Design
TITLE : **ALL BUILDINGS** LOCATION PLAIN	Drawing: **1-7**
Registered:	Date : APRIL 2021 / Scale : 1:100

Note:

- THIS DOCUMENT IS PRIVATE PROPERTY. ALL RIGHTS, TITLE AND INTEREST, IN THIS DOCUMENT INCLUDING ANY AND ALL COPYRIGHTS THEREIN, ARE OWNED BY IOM - INTERNATIONAL ORGANIZATION FOR MIGRATION

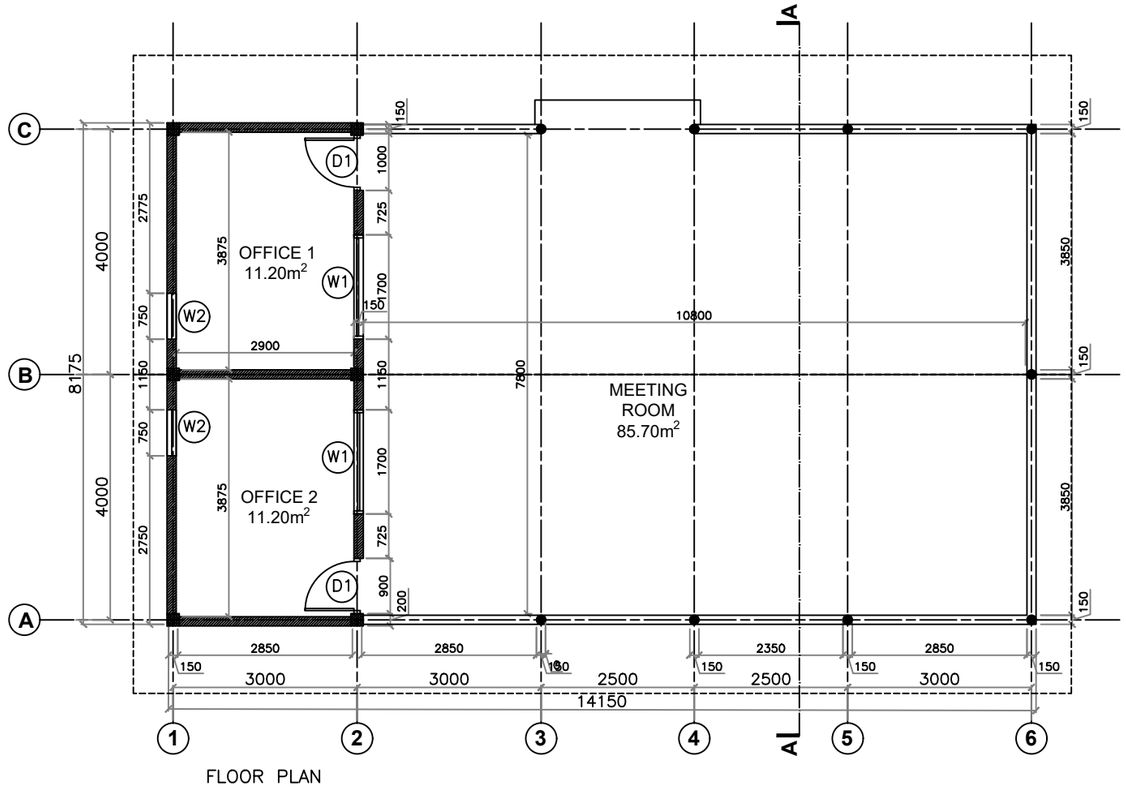

FLOOR PLAN

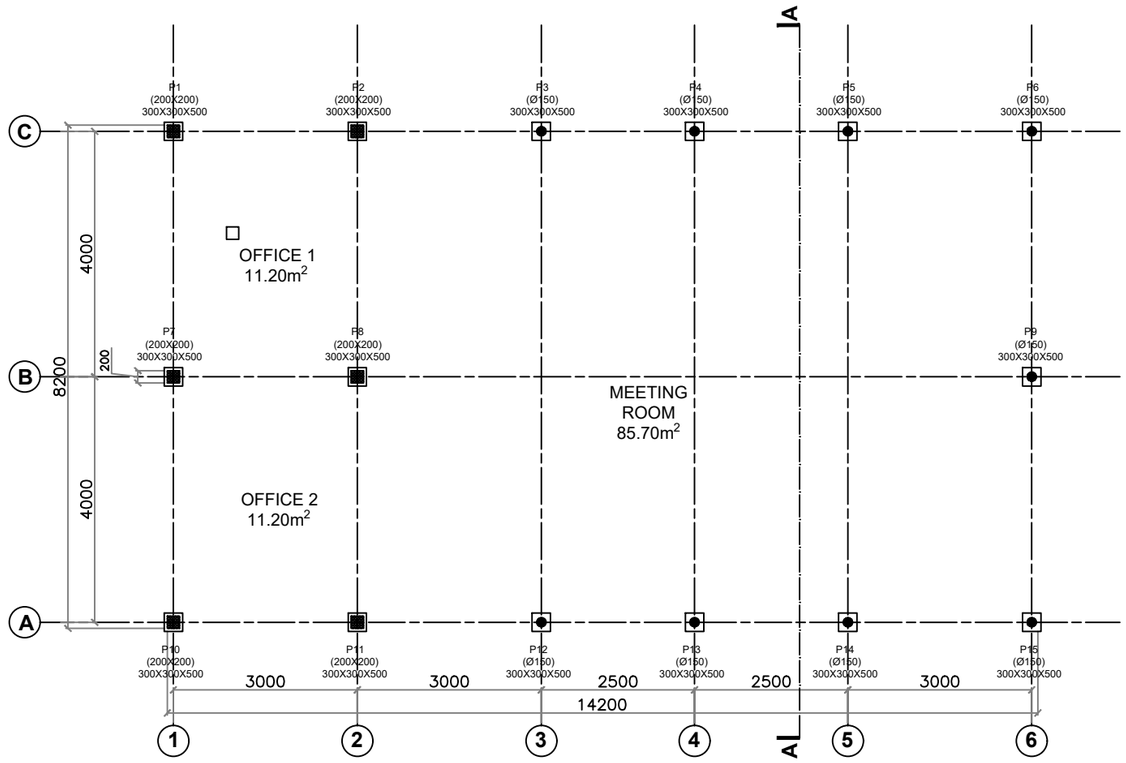

FOUNDATION LEVEL −0,85

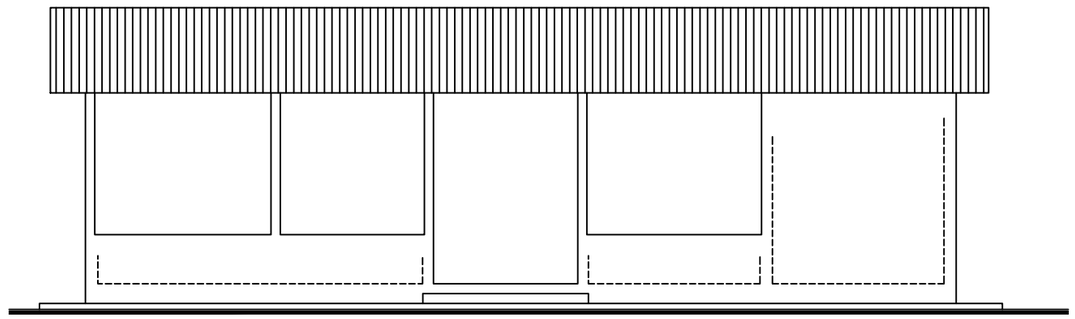

FRONT

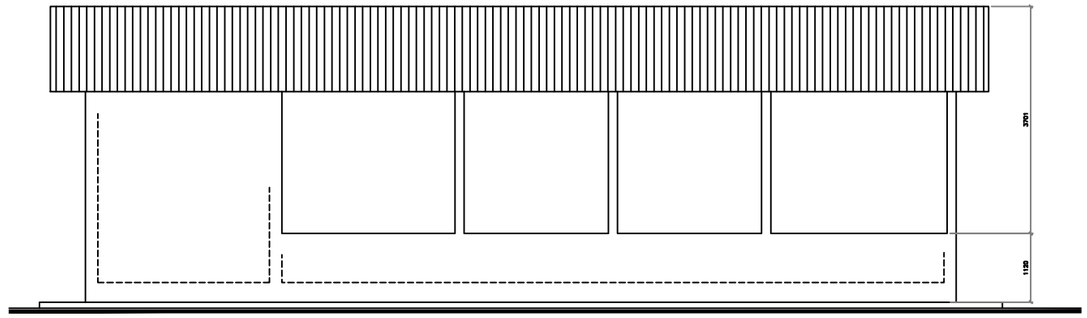

BACK

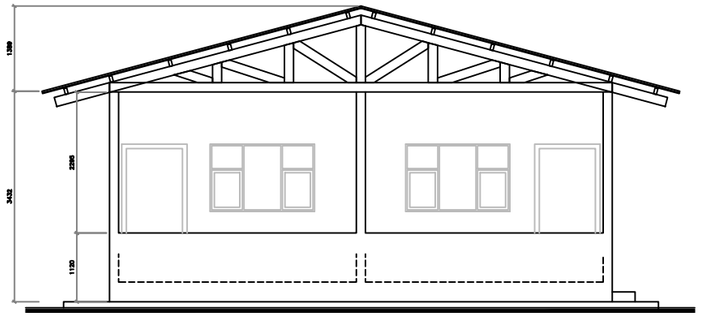

LEFT

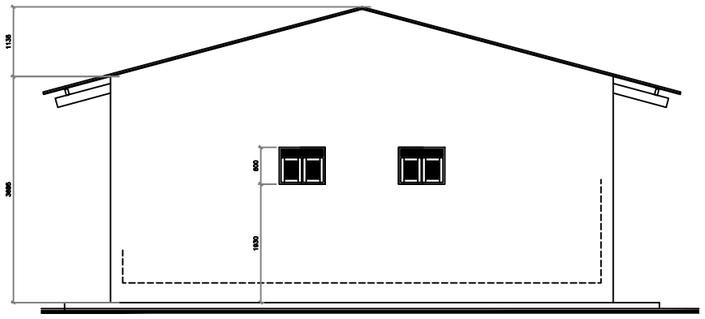

RIGHT

IOM
UN MIGRATION

PROJECT AREA : COMMUNITY REVITALIZATION	CODE : CREU02
PROJECT NAME : **EU COMMUNITY CENTER**	
LOCATION: EU COMMUNITY - CABO DELGADO - MOZAMBIQUE	PHASE : Detail Design
TITLE : **MAIN BUILDING** FLOOR PLAN AND ELEVATIONS	Drawing: **A.04**
Registered:	Date : APRIL 2022 / Scale : 1:100

Note:

- All DIMENSION AND LEVELS ARE IN mm MUST BE VERIFIED AND CHECKED AT THE SITE
- THE DOCUMENT IS PRIVATE PROPERTY.ALL RIGHTS TITLE AND INTEREST, IN THIS DOCUMENT.INCLUDING ANY AND ALL COPYRIGHTS THEREIN, ARE OWNED BY IOM- INTERNACIONAL ORGANIZATION FOR MIGRATION

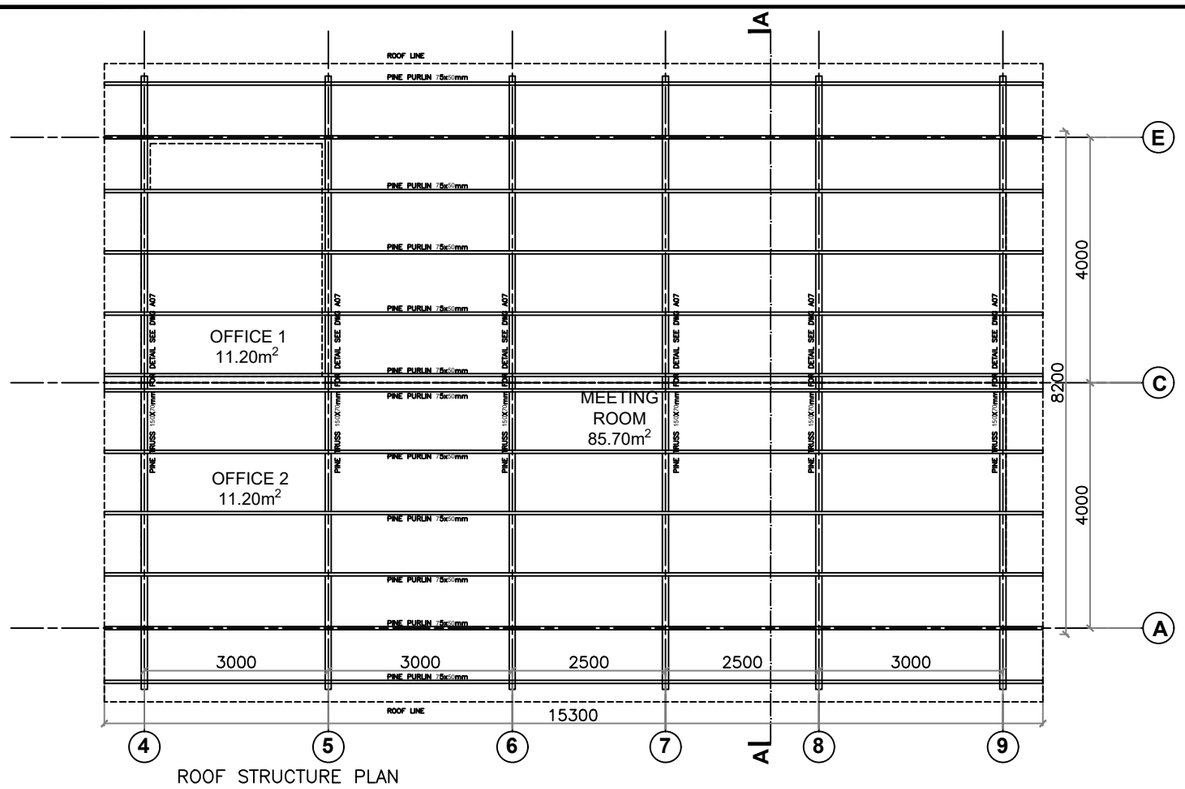

ROOF STRUCTURE PLAN

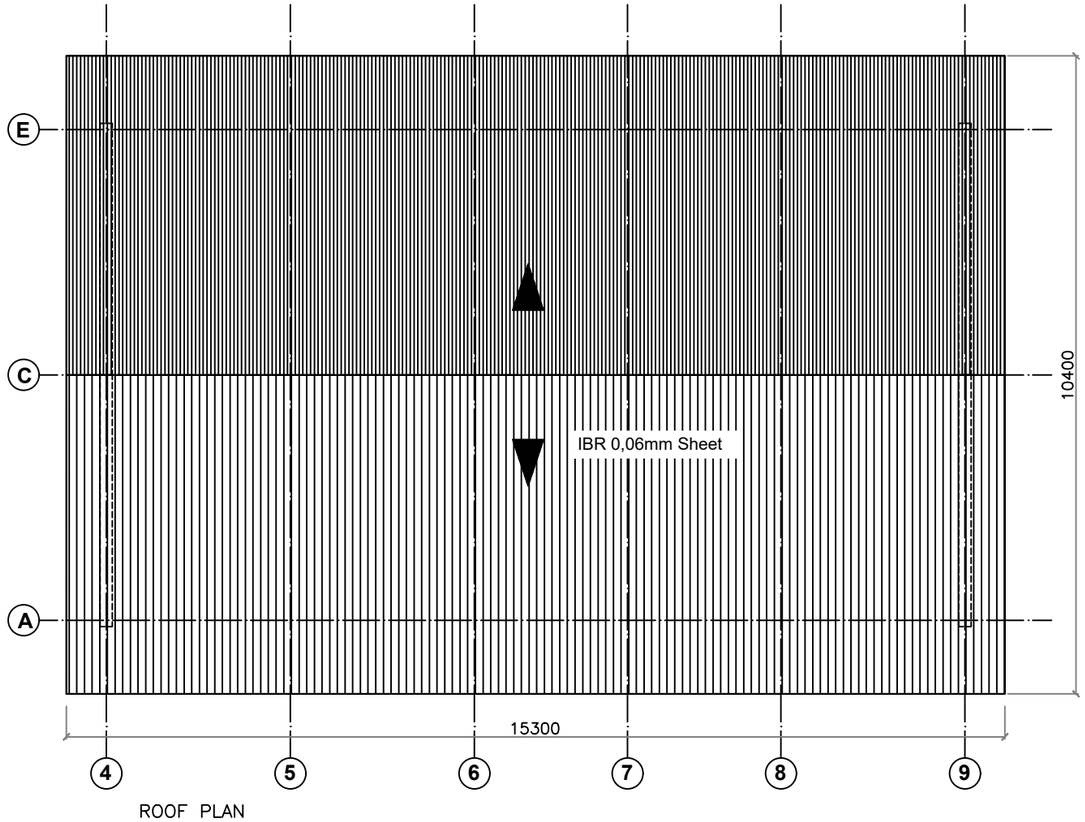

ROOF PLAN

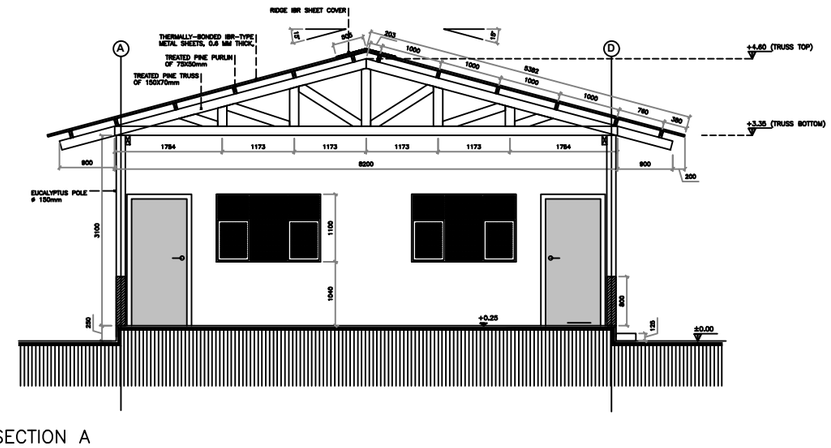

SECTION A

IOM UN MIGRATION

PROJECT AREA : COMMUNITY REVITALIZATION	CODE : CREU02
PROJECT NAME : **EU COMMUNITY CENTER**	
LOCATION: EU COMMUNITY - CABO DELGADO - MOZAMBIQUE	PHASE : Detail Design
TITLE : **MAIN BUILDING** ROOF STRUCTURE PLANS	Drawing: **A.05**
Registered:	Date : APRIL 2022 / Scale : 1:100

Note:

- All DIMENSION AND LEVELS ARE IN mm MUST BE VERIFIED AND CHECKED AT THE SITE
- THE DOCUMENT IS PRIVATE PROPERTY.ALL RIGHTS TITLE AND INTEREST, IN THIS DOCUMENT.INCLUDING ANY AND ALL COPYRIGHTS THEREIN, ARE OWNED BY IOM- INTERNACIONAL ORGANIZATION FOR MIGRATION

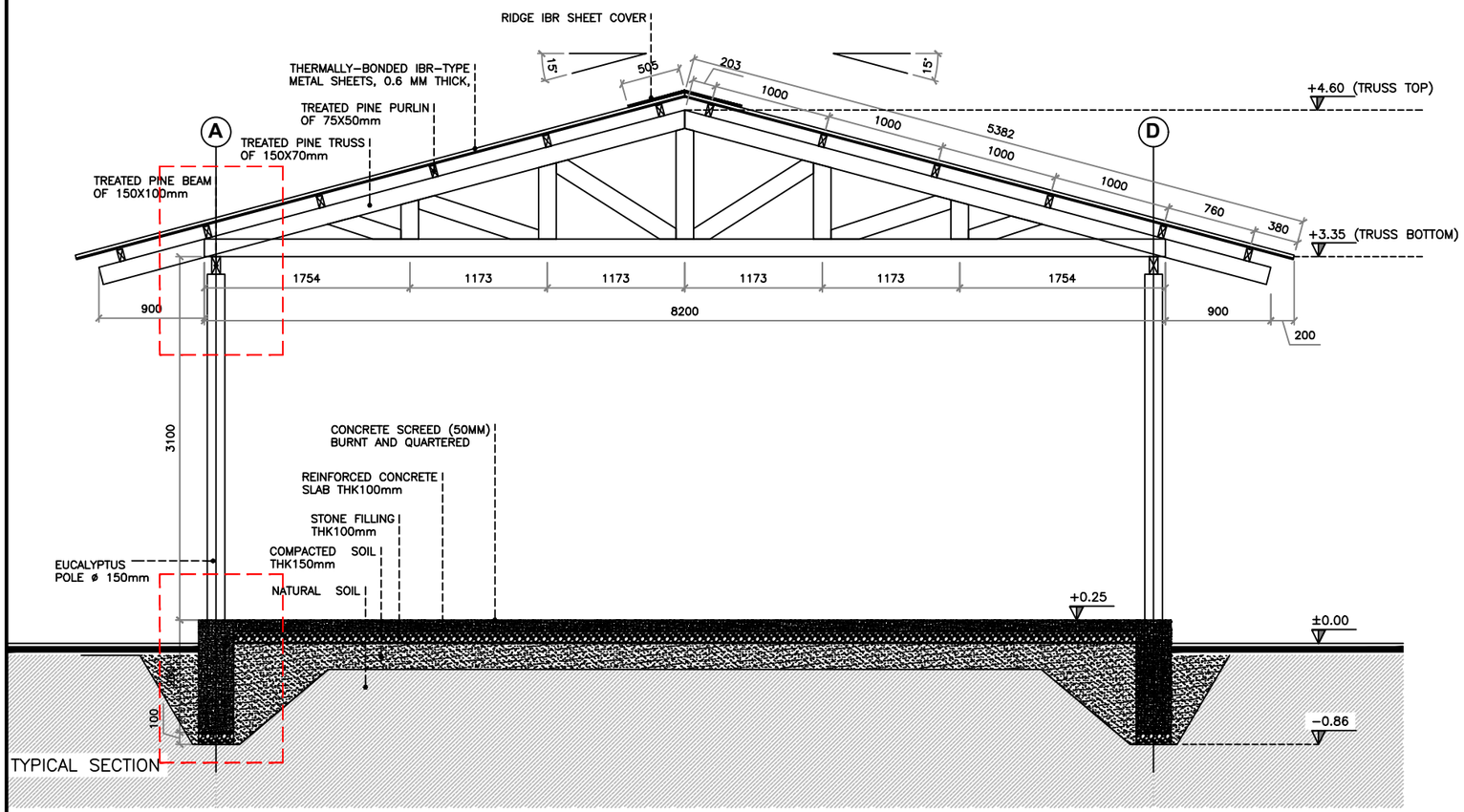

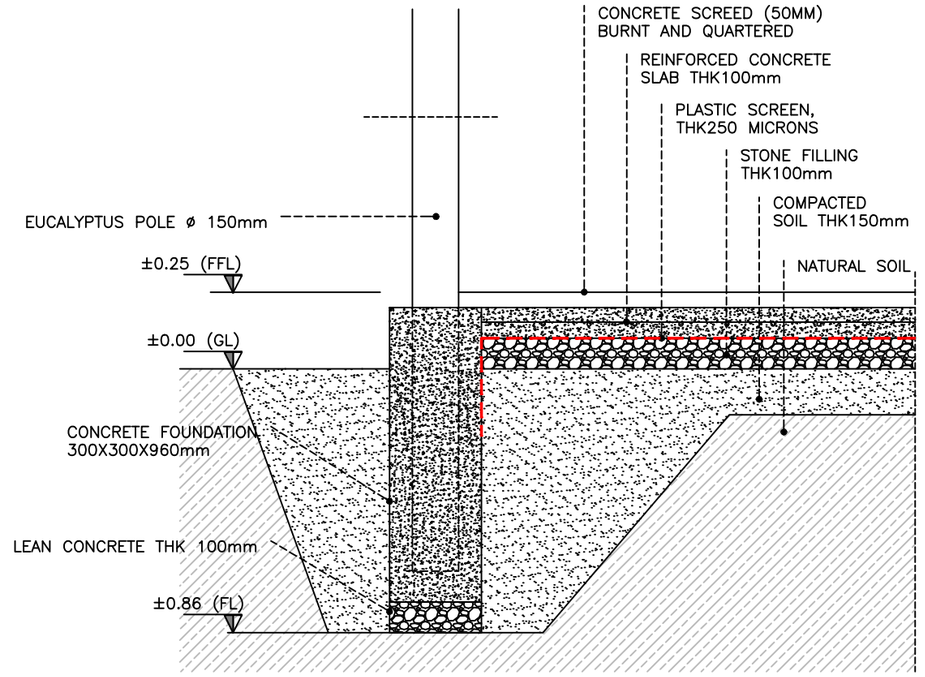

TYPICAL EUCALYPTUS COLUMN SECTION

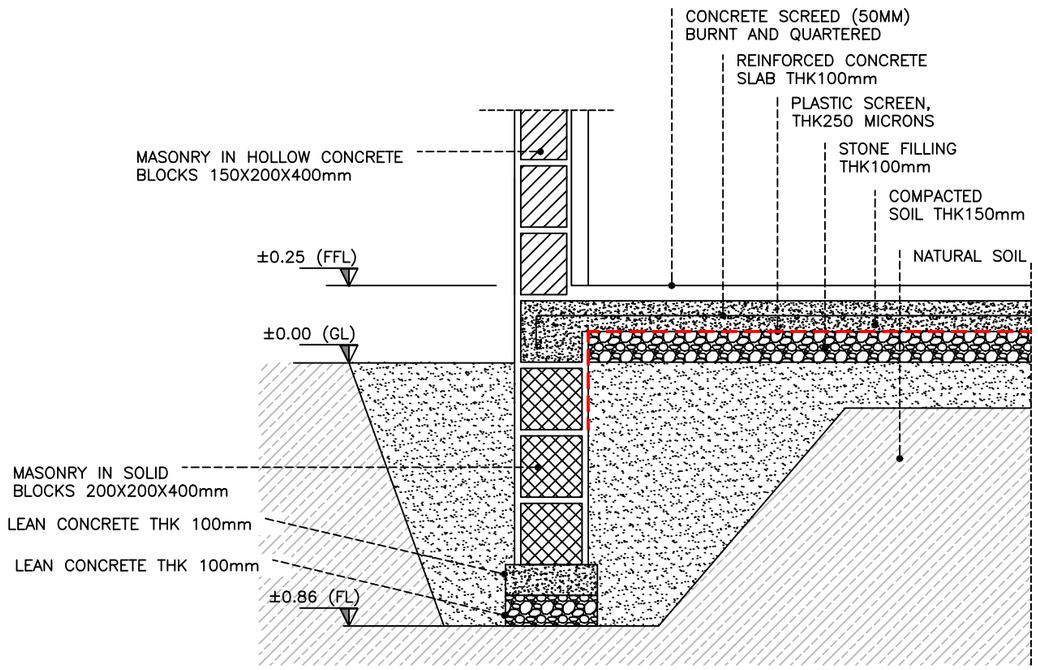

TYPICAL WALL SECTION

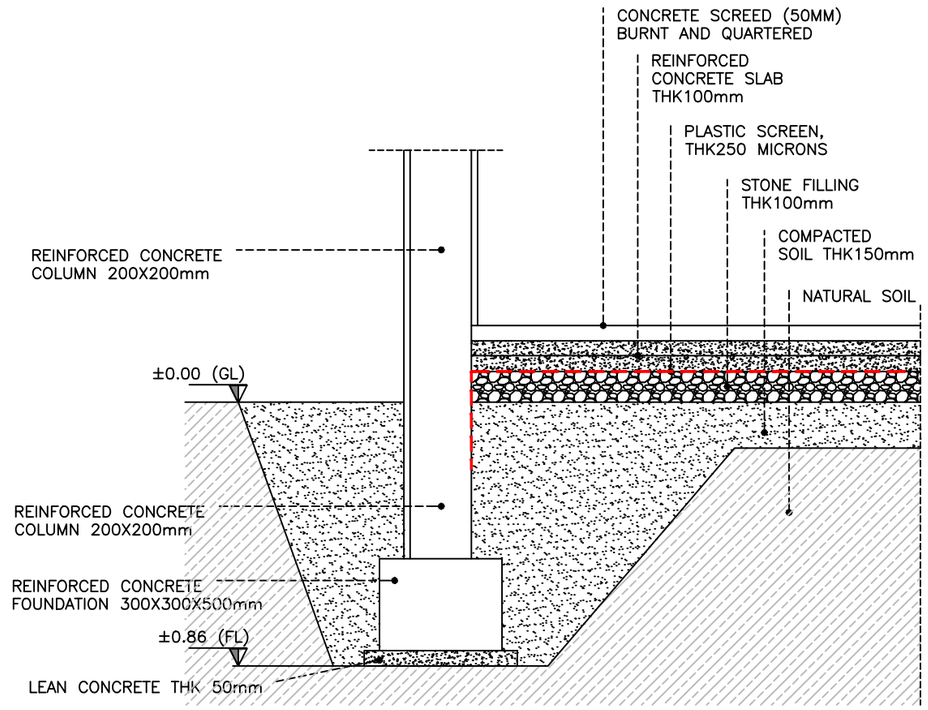

TYPICAL CONCRETE COLUMN SECTION

IOM UN MIGRATION

PROJECT AREA : COMMUNITY REVITALIZATION	CODE : CREU02
PROJECT NAME : **EU COMMUNITY CENTER**	
LOCATION: EU COMMUNITY - CABO DELGADO - MOZAMBIQUE	PHASE : Detail Design
TITLE : **MAIN BUILDING** FOUNDATION DATAILS	Drawing: **A.06**
Registered:	Date : APRIL 2022 / Scale : 1:20/1:50

Note:

- All DIMENSION AND LEVELS ARE IN mm MUST BE VERIFIED AND CHECKED AT THE SITE
- THE DOCUMENT IS PRIVATE PROPERTY.ALL RIGHTS TITLE AND INTEREST, IN THIS DOCUMENT.INCLUDING ANY AND ALL COPYRIGHTS THEREIN, ARE OWNED BY IOM- INTERNACIONAL ORGANIZATION FOR MIGRATION

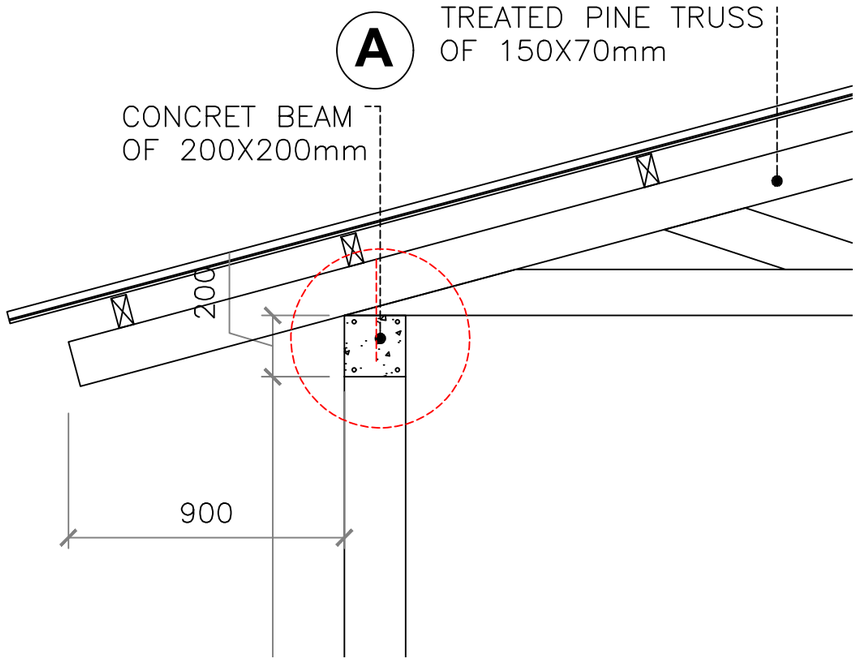

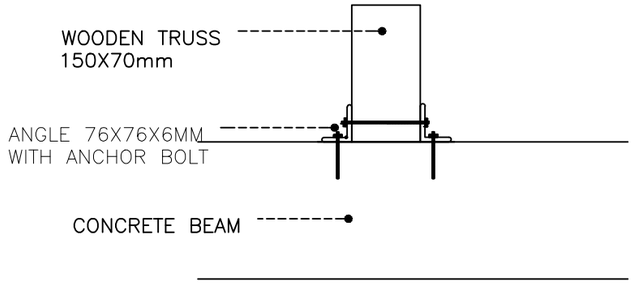

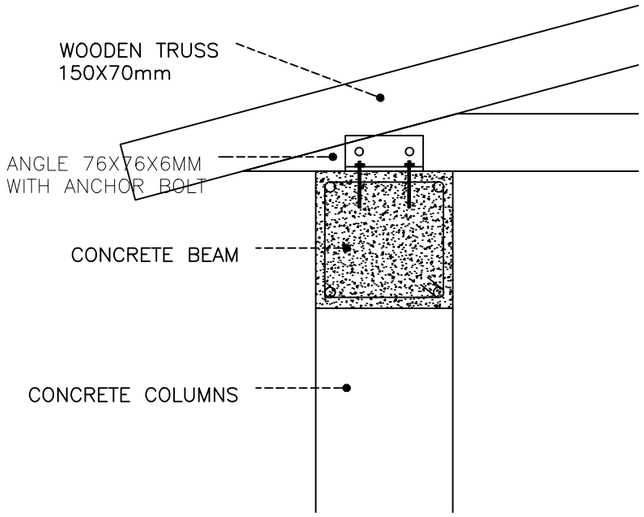

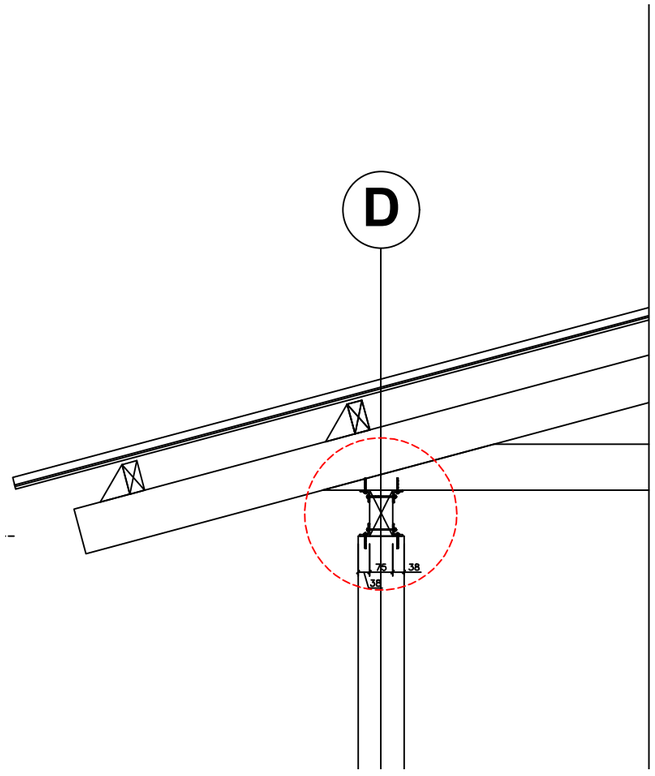

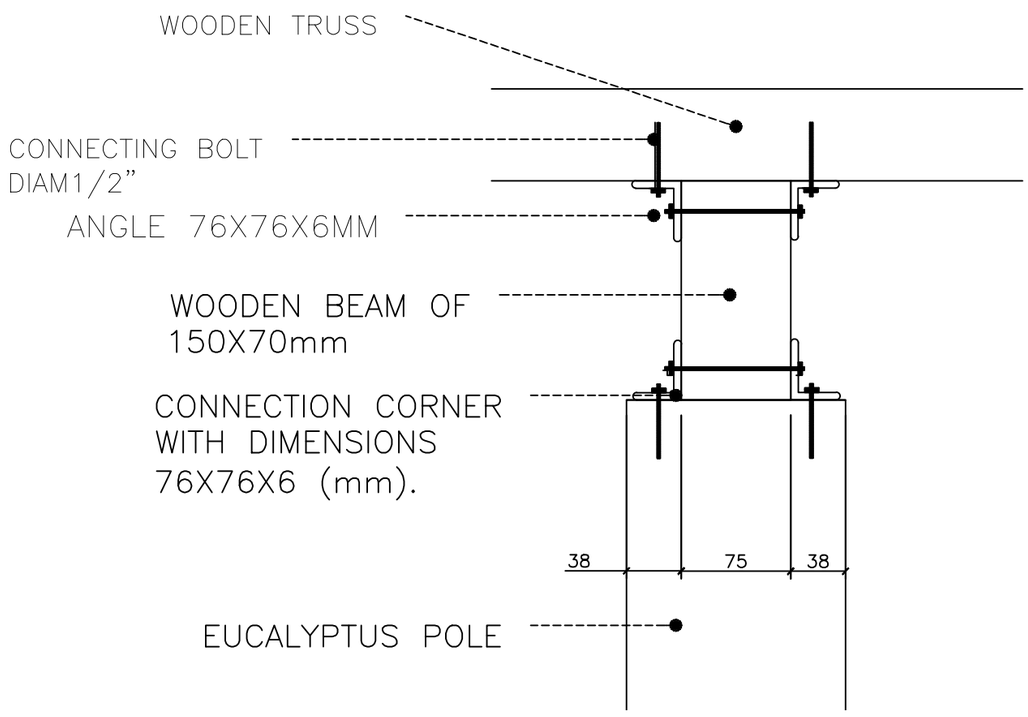

IOM
UN MIGRATION

PROJECT AREA : COMMUNITY REVITALIZATION	CODE : CREU02
PROJECT NAME : **EU COMMUNITY CENTER**	
LOCATION: EU COMMUNITY - CABO DELGADO - MOZAMBIQUE	PHASE : Detail Design
TITLE : **CONNECTIONS DETAILS** TRUSS AND COLUMNS	Drawing: **A.07**
Registered: / Date : APRIL 2022	Scale : 1:20/1:50

Note:

- All DIMENSION AND LEVELS ARE IN mm MUST BE VERIFIED AND CHECKED AT THE SITE
- THE DOCUMENT IS PRIVATE PROPERTY.ALL RIGHTS TITLE AND INTEREST, IN THIS DOCUMENT.INCLUDING ANY AND ALL COPYRIGHTS THEREIN, ARE OWNED BY IOM- INTERNACIONAL ORGANIZATION FOR MIGRATION

TRUSS

TRUSS (DESIGNATION)		DETAIL
LENGTH (mm)	8200	
HEIGHT (mm)	1250	
TOTAL IN BUILDING (un)	6	

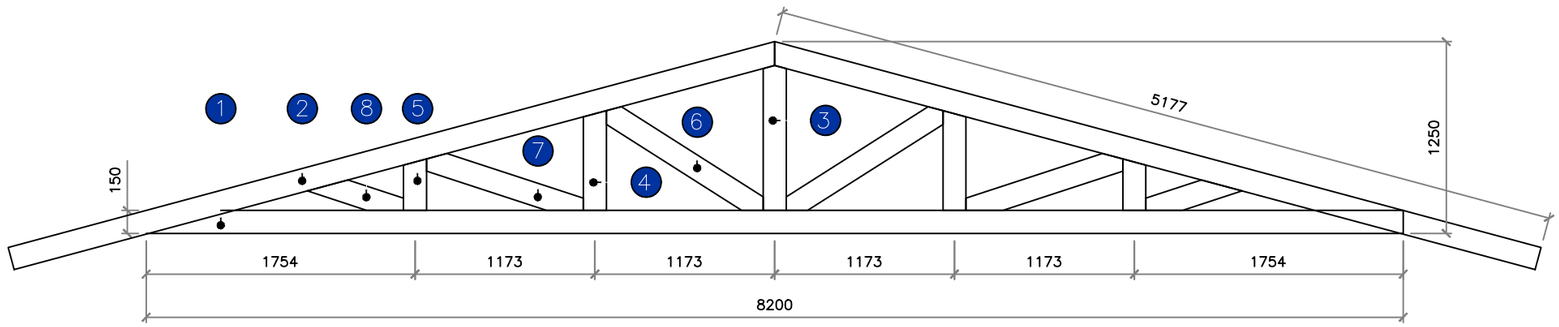

RAFTERS

RAFTER (DESIGNATION)	1	DETAIL
LENGTH (mm)	8200	
TOTAL IN TRUSS (un)	1	
TOTAL IN BUILDING (un)	6	

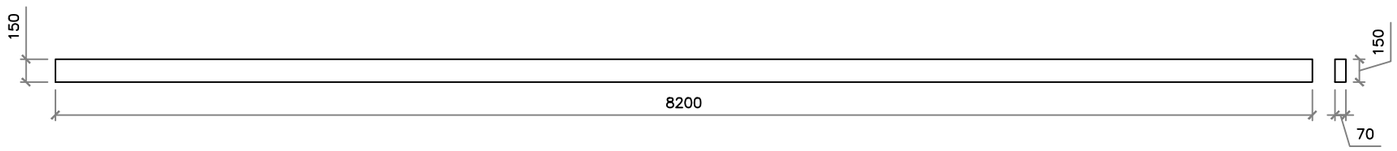

RAFTER (DESIGNATION)	2	DETAIL
LENGTH (mm)	5177	
TOTAL IN TRUSS (un)	2	
TOTAL IN BUILDING (un)	12	

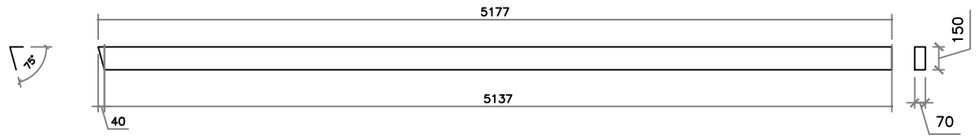

RACKS

RACKS (DESIGNATION)	3	4	5	6	7	8
DETAILS	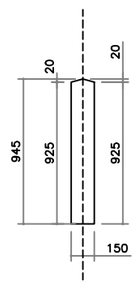	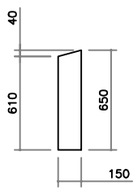	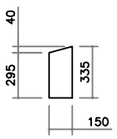	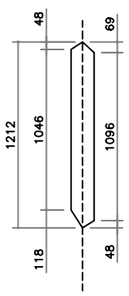	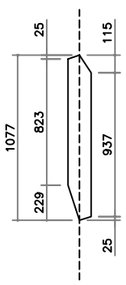	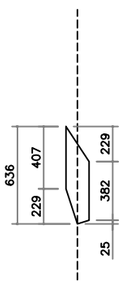
LENGTH (mm)	945	650	335	1212	1077	660
TOTAL IN TRUSS (un)	1	2	2	2	2	2
TOTAL IN BUILDING (un)	6	12	12	12	12	12

25.5m

IOM UN MIGRATION

PROJECT AREA : COMMUNITY REVITALIZATION	CODE : CREU02
PROJECT NAME : **EU COMMUNITY CENTER**	
LOCATION: EU COMMUNITY - CABO DELGADO - MOZAMBIQUE	PHASE : Detail Design
TITLE : **ROOF STRUCTURE** ROOF STRUCTURE DETAILS	Drawing: **A.08**
Registered:	Date : APRIL 2022 / Scale : 1:50/1:100

Note:

- All DIMENSION AND LEVELS ARE IN mm MUST BE VERIFIED AND CHECKED AT THE SITE
- THE DOCUMENT IS PRIVATE PROPERTY. ALL RIGHTS TITLE AND INTEREST, IN THIS DOCUMENT.INCLUDING ANY AND ALL COPYRIGHTS THEREIN, ARE OWNED BY IOM- INTERNACIONAL ORGANIZATION FOR MIGRATION

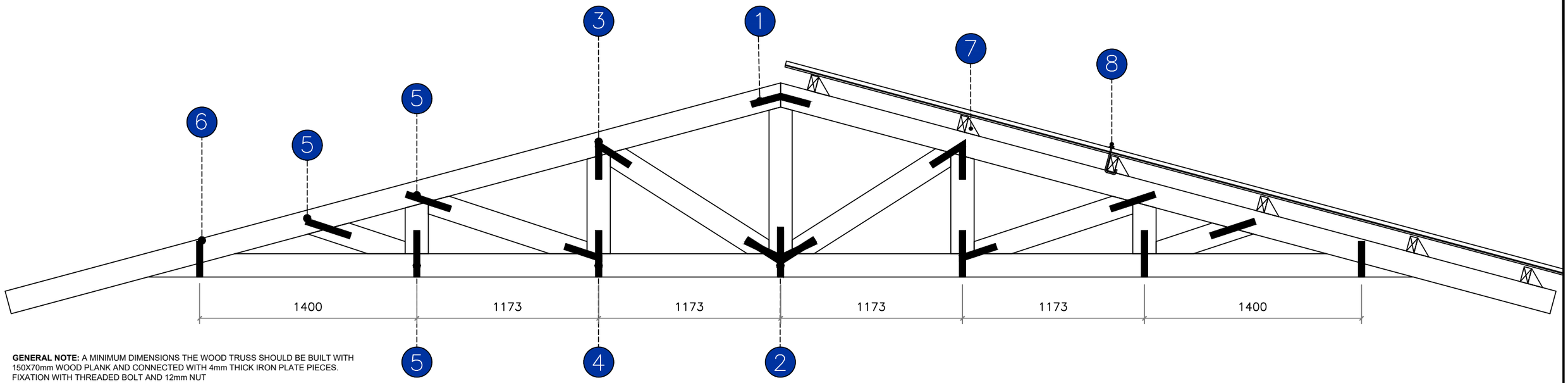

GENERAL NOTE: A MINIMUM DIMENSIONS THE WOOD TRUSS SHOULD BE BUILT WITH 150X70mm WOOD PLANK AND CONNECTED WITH 4mm THICK IRON PLATE PIECES. FIXATION WITH THREADED BOLT AND 12mm NUT

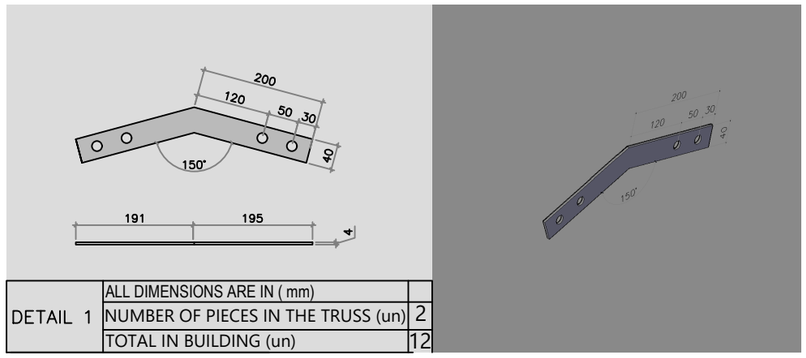

DETAIL 1	ALL DIMENSIONS ARE IN (mm)	
	NUMBER OF PIECES IN THE TRUSS (un)	2
	TOTAL IN BUILDING (un)	12

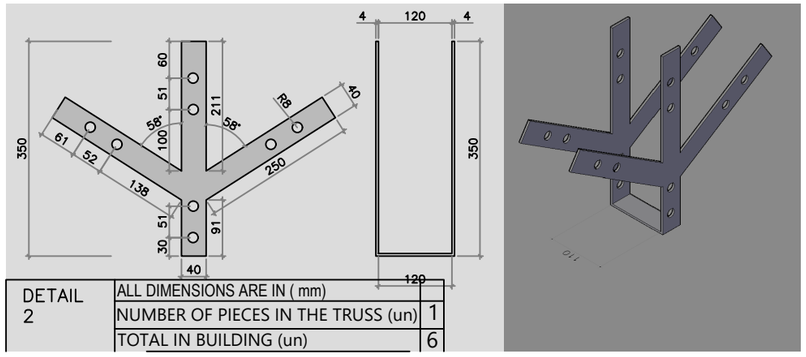

DETAIL 2	ALL DIMENSIONS ARE IN (mm)	
	NUMBER OF PIECES IN THE TRUSS (un)	1
	TOTAL IN BUILDING (un)	6

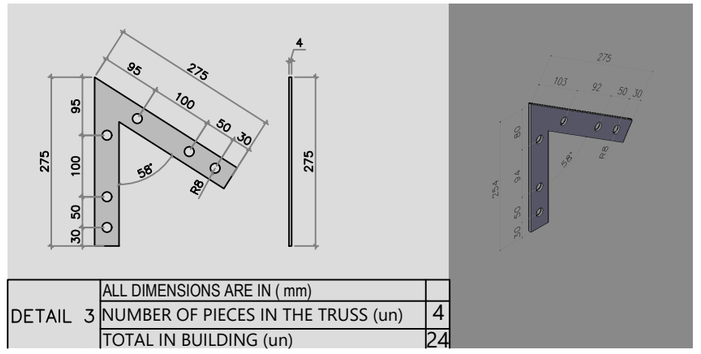

DETAIL 3	ALL DIMENSIONS ARE IN (mm)	
	NUMBER OF PIECES IN THE TRUSS (un)	4
	TOTAL IN BUILDING (un)	24

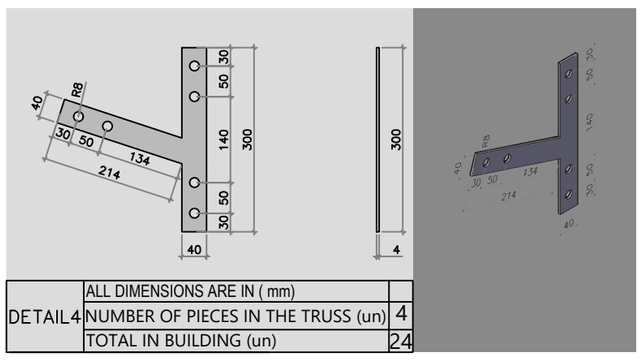

DETAIL4	ALL DIMENSIONS ARE IN (mm)	
	NUMBER OF PIECES IN THE TRUSS (un)	4
	TOTAL IN BUILDING (un)	24

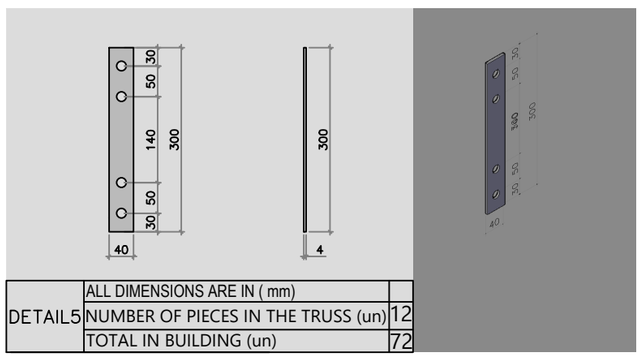

DETAIL5	ALL DIMENSIONS ARE IN (mm)	
	NUMBER OF PIECES IN THE TRUSS (un)	12
	TOTAL IN BUILDING (un)	72

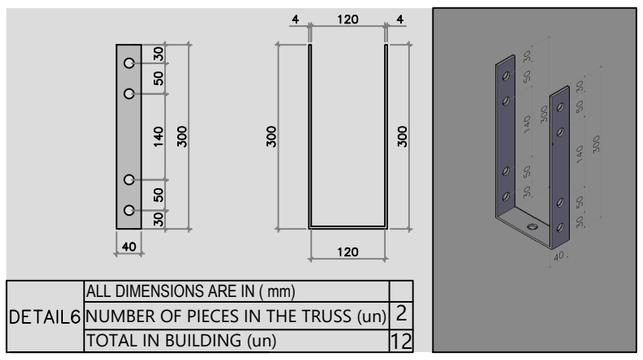

DETAIL6	ALL DIMENSIONS ARE IN (mm)	
	NUMBER OF PIECES IN THE TRUSS (un)	2
	TOTAL IN BUILDING (un)	12

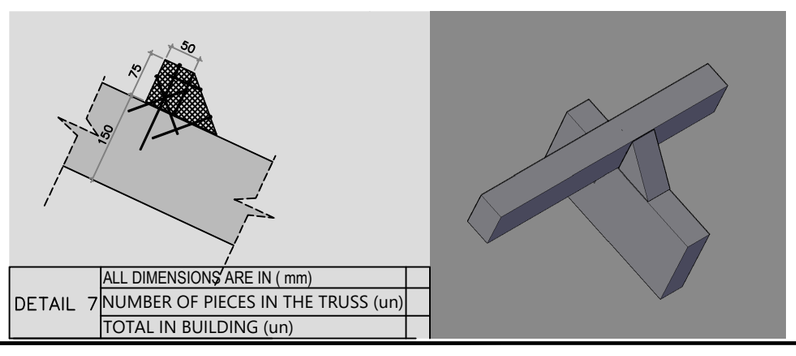

DETAIL 7	ALL DIMENSIONS ARE IN (mm)	
	NUMBER OF PIECES IN THE TRUSS (un)	
	TOTAL IN BUILDING (un)	

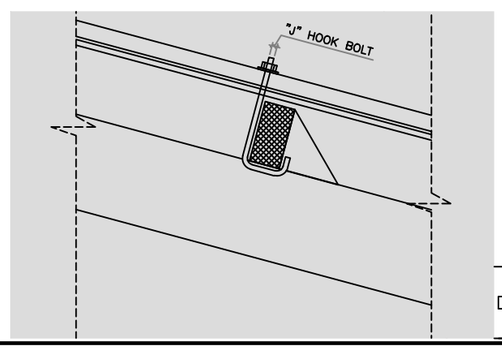

DETAIL8	ALL DIMENSIONS ARE IN (mm)	
	NUMBER OF PIECES IN THE TRUSS (un)	
	TOTAL IN BUILDING (un)	

IOM
UN MIGRATION

PROJECT AREA : COMMUNITY REVITALIZATION	CODE : CREU02
PROJECT NAME : **EU COMMUNITY CENTER**	
LOCATION: EU COMMUNITY - CABO DELGADO - MOZAMBIQUE	PHASE : Detail Design
TITLE : **ROOF STRUCTURE** CONECTIONS DETAILS	Drawing: **A.09**
Registered:	Date : APRIL 2022 / Scale : 1:50/1:100

Note:

- All DIMENSION AND LEVELS ARE IN mm MUST BE VERIFIED AND CHECKED AT THE SITE

- THE DOCUMENT IS PRIVATE PROPERTY.ALL RIGHTS TITLE AND INTEREST, IN THIS DOCUMENT.INCLUDING ANY AND ALL COPYRIGHTS THEREIN, ARE OWNED BY IOM- INTERNACIONAL ORGANIZATION FOR MIGRATION

DOOR (DESIGNATION)	D1
DETAILS	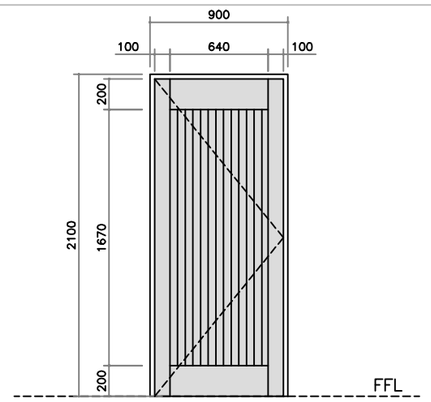
ROOM	OFFICE 1/OFFICE 2
DIMENSION	ARO/FRAME: 900X2100mm FOLHA/LEAF: 840X2070mm
MATERIAL	FIRST QUALITY CHAMFUTA HARDHOOD
DETAILS	DOBRADIÇA: EM LATÃO MACIÇO COM ANILHAS DUPLAS DO TIPO H032 100x75 HD DA "HMP" - 3 POR FOLHA HINGES: POLISHED BRASS DOUBLE WASHERS TYPE H032 100x75HD BY "HMP" – 3/LEAF ON DOOR CONJUNTO DE FECHADURA E MAÇANETA TIPO: YALE 4600 (LN) KNOB LOCKSET TYPE: YALE 4600 (LN) OR EQUIVALENT BATENTE DE PORTA DE PAVIMENTO FLOOR DOORS STOP ACABAMENTO: PINTURA A ESMALTE SOB PRIMARIO APROPRIADO FINISHING: ENAMEL PAINT ON UNDERCOAT
QTY	2

WINDOWS (DESIGNATION)	W1	W2
DETAILS	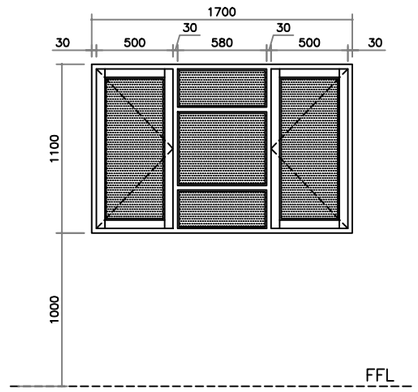	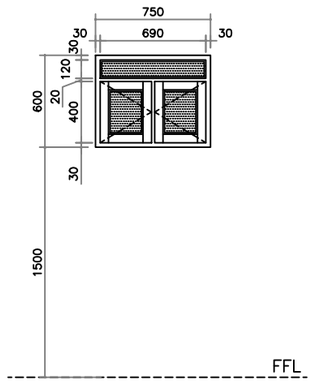
ROOM	OFFICE 1/OFFICE 2	OFFICE 1/OFFICE 2
DIMENSION	1700X1100	1200X2100
MATERIAL	FIRST QUALITY CHAMFUTA HARDHOOD	FIRST QUALITY CHAMFUTA HARDHOOD
DETAILS	GLASS: FLAT TRANSPARENT 4mm THICK *VIDRO: LISO TRANSPARENTE 4mm ESPESSURA* INSECT SCREEN: STAINLESS STEEL MESH *REDEMOSQUITEIRA: REDE EM ACO INOXIDAVEL* HINGES: POLISHED BRASS TYPE H023 75x47 "HMP" 2/LEAF (GLASS AND INSECT SCREEN) *DOBRADICA: EM LATAO DO TIPO H023 75x47 da "HMP" 2/FOLHA (VIDRO E REDE)* WINDOWS FITTINGS: POLISHED BRASS TYPE B2757 FROM "CONWAYS" 1/LEAF (GLASS AND INSECT SCREEN) *FECHOS: EM LATAO MACICO DO TIPO: B2757 DA CONWAYS 1/FOLHA (VIDRO E REDE)* STAYS: POLISHED BRASS TYPE B2764 FROM CONWAYS 1/GLASS LEAF *REGULADOR: EM LATAO MACICO DO TIPO: B2764 DA CONWAYS 1/FOLHA DE VIDRO* FINISHING: ENAMEL PAINT ON UNDERCOAT *ACABAMENTO: PINTURA ESMALTE SOB PRIMARIO*	GLASS: FLAT TRANSPARENT 4mm THICK *VIDRO: LISO TRANSPARENTE 4mm ESPESSURA* INSECT SCREEN: STAINLESS STEEL MESH *REDEMOSQUITEIRA: REDE EM ACO INOXIDAVEL* HINGES: POLISHED BRASS TYPE H023 75x47 "HMP" 2/LEAF (GLASS AND INSECT SCREEN) *DOBRADICA: EM LATAO DO TIPO H023 75x47 da "HMP" 2/FOLHA (VIDRO E REDE)* WINDOWS FITTINGS: POLISHED BRASS TYPE B2757 FROM "CONWAYS" 1/LEAF (GLASS AND INSECT SCREEN) *FECHOS: EM LATAO MACICO DO TIPO: B2757 DA CONWAYS 1/FOLHA (VIDRO E REDE)* STAYS: POLISHED BRASS TYPE B2764 FROM CONWAYS 1/GLASS LEAF *REGULADOR: EM LATAO MACICO DO TIPO: B2764 DA CONWAYS 1/FOLHA DE VIDRO* FINISHING: ENAMEL PAINT ON UNDERCOAT *ACABAMENTO: PINTURA ESMALTE SOB PRIMARIO*
QUANTITY	2	4

IOM UN MIGRATION

PROJECT AREA : COMMUNITY REVITALIZATION	CODE : CREU02
PROJECT NAME : **EU COMMUNITY CENTER**	
LOCATION: EU COMMUNITY - CABO DELGADO - MOZAMBIQUE	PHASE : Detail Design
TITLE : **ALL BUILDINGS** DOOR SCHEDULE	Drawing: **A.10**
Registered: / Date : APRIL 2022	Scale : 1:50

Note:

- All DIMENSION AND LEVELS ARE IN mm MUST BE VERIFIED AND CHECKED AT THE SITE
- THE DOCUMENT IS PRIVATE PROPERTY.ALL RIGHTS TITLE AND INTEREST, IN THIS DOCUMENT.INCLUDING ANY AND ALL COPYRIGHTS THEREIN, ARE OWNED BY IOM- INTERNACIONAL ORGANIZATION FOR MIGRATION

Client: International Organization for Migration (IOM) / Organização Internacional para as Migrações (OIM)

Work: Construction a standarized Community Center / Construção de um Centro Comunitário Standarizado

Local: Pambara - Namuno - Cabo Delegado

Date: Mav 12 2022

International Organization for Migration (IOM)
The UN Migration Agency

SUMMARY OF BUDGET

SECTION	DESCRIPTION	DESCRICAO	TOTAL AMMOUNT (MZN)	(USD)
CHAP 01	PRELIMINARIES (EARTHWORKS & FOUNDATIONS)	PRELIMINARES (MOVIMENTO DE TERRA & FUNDACAO)	0.00	
CHAP 02	PAVEMENTS FLOOR	PAVIMENTO	0.00	
CHAP 03	EXTERNAL & INTERNAL WALLS	PAREDES EXTERNAS E INTERNAS	0.00	
CHAP 04	ROOFING	COBERTURA	0.00	
CHAP 05	PAVEMENTS AND WALL FINISHES	ACABAMENTO DE PAVIMENTO E PAREDES	0.00	
CHAP 06	CARPENTRY	CARPINTARIA	0.00	
CHAP 07	ELECTRICITY	ELECTRICIDADE	0.00	
	TOTAL		**0.00**	USD 0.00
	VAT(17%)		0.00	
	TOTAL AMOUNT		**0.00**	**USD 0.00**

Art.	Description of Activities	Descrição das Actividades	UN	QTY	Cost Estimate Unit.	Total
	VERY IMPORTANT NOTE: **The cost mentioned in the BoQ should always include all related works (Mobilization, demobilization, Hiring technician staff and applying HSST protocols for safety and Security, with a First Aid kit to be at the site, also this should be considered for the temporary fencing, fire Extinguishers, work plate, and hiring the needed equipment on timely basis)**	**NOTA MUITO IMPORTANTE:** **O custo mencionado no MQ deve sempre incluir todos os trabalhos relacionados (Mobilização, desmobilização, Contratação de pessoal técnico e aplicação dos protocolos HSST de segurança e protecção, com um kit de primeiros socorros a estar no local, também isto deve ser considerado para as vedações temporárias, Extintores de incêndio, placa de obra e contratação atempada do equipamento necessário)**				
CHAP 01	**PRELIMINARIES (EARTHWORKS & FOUNDATIONS)**	**PRELIMINARES (MOVIMENTO DE TERRA & FUNDACAO)**			Insert your cost proposal	
1.1	Excavation and backfill in foundation trenches, 400mm wide, depth > 850mm, including watering and compaction of the foundation beds and backfilling shall be done as instructed by the site engineer and in layers not more than 200mm thick and well compacted with earth compactor or compactor (95% AASTHO). Transport for surplus waste material, if required, should be included.	Escavação e aterro em valas de fundação, com largura de 400mm, profundidade > 850mm, incluindo rega e compactação dos leitos das fundações e o enchimento de fundo deve ser feito de acordo com as instruções do engenheiro do local e em camadas não superiores a 200mm de espessura e bem compactado com compactador de terra ou compactador (95% AASTHO). O transporte para os resíduos de material excedente, se necessário, deve ser incluído.	m³	**14.03**		MZN -
1.2	Anti-termite treatment, with a 10-year guarantee, whose certificate must be shared by the contractor.	Tratamento anti-térmites, com garantia de 10 anos, cujo o certificado devera ser partilhado pelo empreteiro.	m²	**116.44**		MZN -
1.3	Providing and laying of 100mm of rockfill in median stones at the base of foundation ...(cb meter)	Fornecimento e aplicação de 100 mm de enrocamento em pedra mediana em base de fundações.	m³	**1.65**		MZN -
1.4	Providing & Laying of Lean Concrete (Class B15) 50mm thick in underneath foundation ...(cb meter)	Betao vibrado de classe B15 para Betao de limpeza com 50mm de espessura	m³	**0.83**		MZN -
1.5	Supply and placement of simple B25 concrete in the foundation footings, including all necessary works	Fornecimento e colocação de Betão simples B25 nas sapatas de fundacao, incluindo todos os trabalhos necessários				
1.5.1	Concrete ...(cb meter) (300x300x1100mm)x15 foundation footings	Betao (300x300x1000mm)x15 sapatas	m³	**1.35**		MZN -
1.6	Providing and laying of 200mm foundation walls with filled cement/concrete blocks, C.M. 1:5, including all necessary and complementary works. ...(sq meter)	Fornecimento e assentamento de paredes de 400x200x200mm em blocos macissados, assentes com argamassa de cimento e areia ao traço 1:5 'incluindo todos os trabalhos complementares	m²	**30.00**		MZN -
	Sub-total of Earthworks & Foundations	***Sub-total de Movimento de Terra e Fundações***				***MZN -***
CHAP 02	**PAVEMENTS FLOOR**	**PAVIMENTO**				
2.1	Providing and laying of 100mm of rockfill in median stones at the pavements, with the compacting, dimentions of (19~38mm)	Fornecimento e colocação de 100mm de enrocamento, brita mediana na caixa de pavimento, com a compactação, dimensões de (19~38mm)	m²	**11.53**		MZN -
2.2	Supply and assembling of plastic screen, GLUNPLUS USB GREEN or HYPERLASTIC ORANGE, 250 microns thickness	Fornecimento e montagem de membranda de polietileno/tela plástica, GLUNPLUS USB GREEN ou HYPERLASTIC ORANGE, 250 microns de espessura, para impermeabilizacao.	m²	**116.44**		MZN -
2.3	Providing and aplication of electrowelded mesh ref.AR75 300X300X60 mm, for ground floor slab, including chocks spacers, knotting wire, folds, hooks, splices, waste, and all necessary works and materials.	Fornecimento e aplicação de malha electrosoldada ref.AR75 300X300X60, para laje de pavimento, incluindo espaçadores de calços, arame de atar, dobras, ganchos, emendas, sobreposições, e todos os trabalhos e materiais necessários.	m²	**116.44**		MZN -
2.4	Supply and placement of concrete B25, including all the necessary works for the construction of pavement slab with 100mm thickness	Fornecimento e colocação de betão B25, incluindo todas as obras necessárias para a construção de laje de pavimento com 100mm de espessura	m²	**11.64**		MZN -
	Sub-total of Pavement Floor	***Sub-total do Pavimento***				***MZN -***
CHAP 03	**EXTERNAL & INTERNAL WALLS**	**PAREDES INTERNAS & EXTERNAS**				
3.1	Providing and laying of 200x150x400mm masonry of hollow blocks, in external walls, laid with cement mortar and sand; including all necessary and complementary works. ...(sq meter)	Fornecimento e assentamento de alvenarias em blocos vazados de cimento e areia com 400x200x150mm, em paredes, assentes com argamassa de cimento e areia	m²	**83.10**		MZN -
3.3	Supply and placement of B25 reinforced concrete in the pillars, including all the necessary work (cutting, shaping, placement and assembly of reinforcement in A400 NR steel bars, including shims, tying wire, bends, hooks, splices, overlaps, waste)	Fornecimento e colocação de Betão armado B25 nos pilares, incluindo todos os trabalhos necessários (corte, moldagem, colocação e montagem de armaduras em varão de aço A400 NR, incluindo calços, arame de atar, dobras, ganchos, empalmes, sobreposições, desperdícios)				
3.3.1	Concrete ...(cb meter) (200x200x3100mm)x6	Betao (200x200x4100mm)x6	m³	**0.98**		MZN -
3.3.2	Ø6 ...(kg) (pillar)	Ø6 (pilar)	kg	**36.91**		MZN -
3.3.3	Ø10 ...(kg) (pillar)	Ø10 (pilar)	kg	**66.62**		MZN -
3.4	Supply and placement of circular wooden pillars (treated with carbolim, creosote or similar), with dimensions of 4500mm high, diameter between 150 and 160mm, with metal supports for fixing to the foundation base according to the drawings, including all the necessary work for fixing and anchoring in the mortared area.	Fornecimento e colocação de pilares circulares em madeira (tratada com carbolim, creosoto ou similar), com dimensoes de 4500mm de altura, diametro entre 150 a 160mm, com suportes metalicos para fixacao a base de fundacao segundo os desenhos, incluindo todos os trabalhos necessarios para a fixacao e ancoragem na zona argamassada.	each	**9.00**		MZN -
3.5	Wooden beam (pine or similar), 150x75mm/150x70mm section, well worked, with opposing joints inside the eucalyptus pillars anchored with a 12mm or 16mm diameter threaded screw. (The unit is 6000mm long)	Viga em Madeira (Pinho ou similar), seccao 150x75mm/150x70mm, bem trabalhado, com juntas contrapostas no interior dos pilares em eucalipto ancorados com parafuso roscado diamentro 12mm ou 16mm. (A unidade tem 6000 m de comprimento)	un	**6.00**		MZN -
3.6	Supply and placement of B25 reinforced concrete in the corroding beams, including all the necessary work (cutting, shaping, placement and assembly of reinforcement in A400 NR steel bars, including shims, tying wire, bends, hooks, impalement, overlaps, waste)	Fornecimento e colocação de Betão armado B25 nas vigas de corroamento, incluindo todos os trabalhos necessários (corte, moldagem, colocação e montagem de armaduras em varão de aço A400 NR, incluindo calços, arame de atar, dobras, ganchos, empalmes, sobreposições, desperdícios)				
3.6.1	Concrete ...(cb meter) (200x200x25750mm)	Betao (200x200x25750mm)	m³	**1.02**		MZN -
3.6.2	Ø12 ...(kg)	Ø12	kg	**101.80**		MZN -
3.6.3	Ø6 ...(kg)	Ø6	kg	**26.62**		MZN -
	Sub-total of External & Internal Walls	***Sub-total de Paredes Externas e Internas***				***MZN -***
CHAP 04	**ROOFING**	**COBERTURA**				
4.1	Supply and laying of wood truss, 150x50mm section. Includes assembly, connections (metalic and nails/screws) and painting (two coats of creosote), according to the structural project	Fornecimento e assentamento de treliça em madeira, de seccao 150x50mm. Inclui montagem, conexões (metalicas e pregos/parafusos) e pintura (duas camadas de creosoto), de acordo com o projeto estrutural	each	**6.00**		MZN -
4.2	Supply and laying of wooden purlins (50x75mm). Including assembly, connections (metal and nails/screws) and painting (two coats of creosote).	Fornecimento e assentamento de madres de madeiraa (50x75mm). Incluindo montagem, conexões (metalicas e pregos/parafusos) e pintura (duas camadas de creosoto).	ml	**183.60**		MZN -
4.3	Providing and laying of IBR 686 Chromadeck sheet with 0.6mm, including all fixing elements, according to the manufacturer's recommendations. i=15° ...(sq meter)	Fornecimento e assentamento de chapa de cobertura IBR 686 Chromadeck com 0.6mm, incluindo todos elementos de fixação conforme as recomendações do fabricante, i=15°	m²	**177.48**		MZN -
4.4	Providing and laying Ridge in IBR 686 Chromadeck 0,6mm sheet ...(meter)	Fornecimento e assentamento de Cumeeira em chapa IBR686 Chromadeck 0,6mm.	ml	**15.30**		MZN -
	Sub-total of Roofing	***Sub-total de Cobertura***				***MZN -***
CHAP 05	**PAVEMENTS AND WALL FINISHES**	**ACABAMENTO DE PAVIMENTO E PAREDES**				
	Plastering on walls	Reboco em paredes				
5.1	Execution of 2.5cm thick plaster on walls, columns, and beams, properly leveled with cement mortar and sand to the mix design line 1:4; including roughcast with cement mortar and sand 1:3. ...(sq meter)	Execução de reboco com 2.5cm de espessura em paredes, pilares e vigas devidamente regularizado com argamassa de cimento e areia ao traço 1:4, incluindo chapiscos com argamassa de cimento e areia ao traço 1:3.	m²	**83.53**		MZN -
	Floor Finishes	Acabamentos em Pavimento				
5.2	Execution of concrete (20mm) stroked and quartered, on indoor floor, with cement mortar and sand, in the line 1:4 ...(sq meter)	Execução de betonilha (20 mm) interios afagada e esquartelada em pavimento exterior, com argamassa de cimento e areia ao traço 1:4	m²	**11.64**		MZN -
	Paintings	Pinturas				
5.4	Painting of external walls with two coats of top quality Exterior Plastic paint (from the CIN, PLASCON or NEUCE brand) preceded by preparation of the undercoated wall, in a color to be chosen by the Owner. Including all surface preparation activities. ...(sq meter). Practical spread rate: 4-6 m²/L per coat	Pintura de paredes exteriores a duas demãos de tinta Plástica Exterior de primeira qualidade (da marca CIN), antecedida de preparação da parede com subcapa, de cor a escolher pelo Dono da Obra. Incluindo todas as actividades de preparacão das superficies. Rendimento prático: 4-6 m²/L por demão	m²	**83.53**		MZN -
5.5	Painting of external walls with two coats of top quality Exterior Plastic paint (from the CIN, PLASCON or NEUCE brand) preceded by preparation of the undercoated wall, in a color to be chosen by the Owner. Including all surface preparation activities. ...(sq meter). Practical spread rate: 4-6 m²/L per coat	Pintura de paredes interiores a duas demãos de tinta Plástica Exterior de primeira qualidade (da marca CIN, PLASCON ou NEUCE), antecedida de preparação da parede com subcapa, de cor a escolher pelo Dono da Obra. Incluindo todas as actividades de preparacão das superficies.Rendimento prático:4-6 m²/L por demão.	m²	**83.53**		MZN -
	Sub-total of Pavements & Wall Finishes	***Sub-total de Acabamentos de Pavimentos e Parede***				***MZN -***
CHAP 06	**CARPENTRY**	**CARPINTARIA**				
6.1	Supply and assembling chanfuta wooden windows, including all fixing acessories, and all works for good finishing	Fornecimento e montagem de janelas de madeira chanfuta, incluindo todos os acessórios de fixação, e todos os trabalhos para um bom acabamento:				
6.1.1	W1 (1,70x1,10)	J1 (1,70x1,10)	un	**2.00**		MZN -
6.1.2	W2 (0,75x0,60)	J2 (0,75x0,60)	un	**2.00**		MZN -
6.2	Providing and fixing varnished chamfuta wooden doors; including all acessories, door fittings and jambs, according to the spans map and/or manufacturer's recommendations.	Fornecimento e Assentamento de portas de madeira Chanfuta envernizada, incluindo todos acessorios e ferragens, batentes de acordo com o Mapa de Vãos e recomendações do fabricante.				
6.2.1	D1 (0.9x2.10) ...(each)	P1 (0.9x2.10)	each	**2.00**		MZN -
	Sub-total of Carpentry	***Sub-total de Carpintaria***				***MZN -***
CHAP 07	**ELECTRICITY**	**ELECTRICIDADE**				
	Solar liohts	Iluminacoes Solares				
7.1	Supply and assembling of solar lights; including all necessary acessories, fixings and conections and complementary works and materials, with 50W of power	Fornecimento e montagem de luzes solares; incluindo todos os acessórios necessários, fixações e ligações e trabalhos e materiais complementares, com 50W de potência	un	**4.00**		0.00
	Sub-total of Electricity	***Sub-total de Electricidade***				***MZN -***
	Total Ammount for Administrative Building					**MZN -**

CABO DELGADO-NAMUNO-PAMBARA

Namuno District is a district of Cabo Delgado Province
in northern Mozambique. It covers 6,037 km² with 211,737 inhabitants

Legend

- ACCESS ROAD TO THE COMMUNITY CENTRE.
- ROAD LEADING TO NAMUNO, 50 KM.

S13°46'50.88"

ROAD LEADING TO NAMUNO, 50 KM

20.00

30.00

E 38°31'24.96"

N

Google Earth

Image © 2022 Maxar Technologies

IOM UN MIGRATION

PROJECT AREA : EU - COMMUNITY CENTER	CODE : CRUS10

PROJECT NAME :
TYPICAL COMMUNITY CENTER

LOCATION: PAMBARA COMMUNITY - NAMUNO CABO DELGADO - MOZAMBIQUE	PHASE : Detail Design
TITLE : **ALL BUILDINGS** LOCATION PLAN	Drawing:

Registered:	Date : APRIL 2021	Scale : 1:100

Note:

- All DIMENSION AND LEVELS ARE IN mm MUST BE VERIFIED AND CHECKED AT THE SITE
- THE DOCUMENT IS PRIVATE PROPERTY .ALL RIGHTS TITLE AND INTEREST, IN THIS DOCUMENT.INCLUDING ANY AND ALL COPYRIGHTS THEREIN, ARE OWNED BY IOM- INTERNACIONAL ORGANIZATION FOR MIGRATION

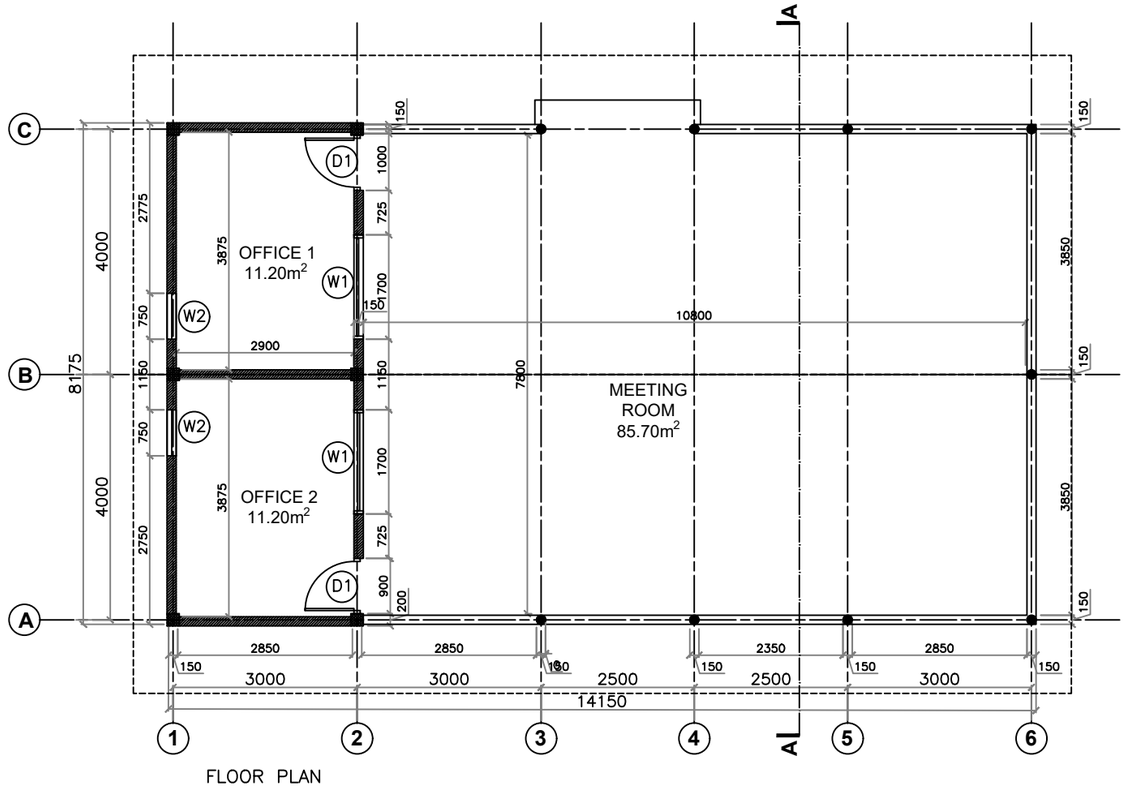

FLOOR PLAN

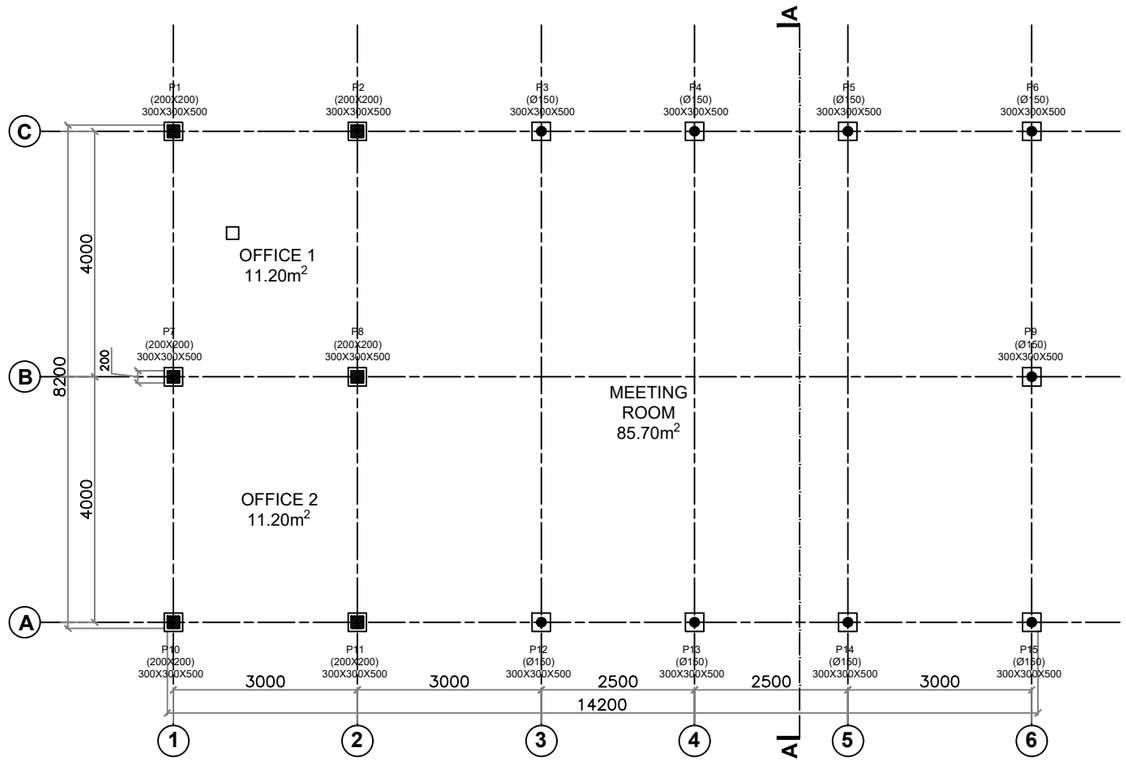

FOUNDATION LEVEL −0,85

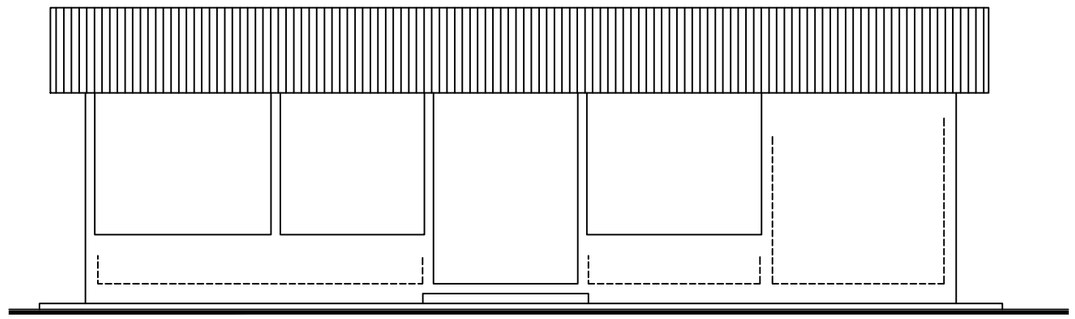

FRONT

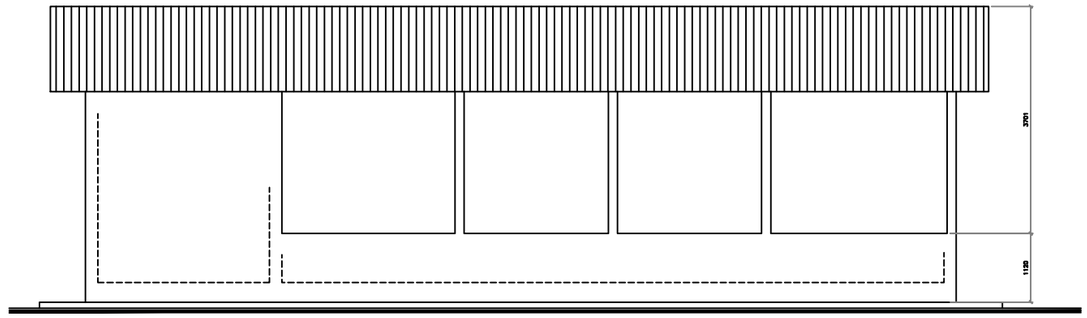

BACK

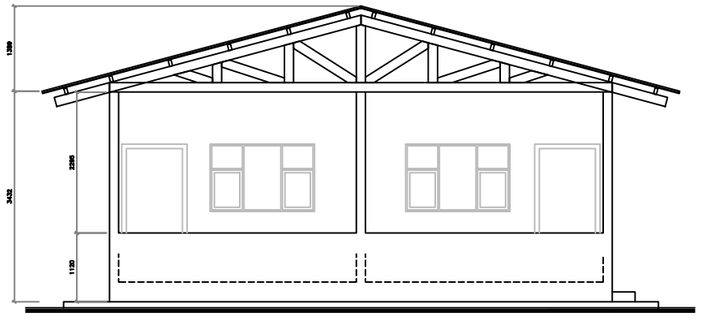

LEFT

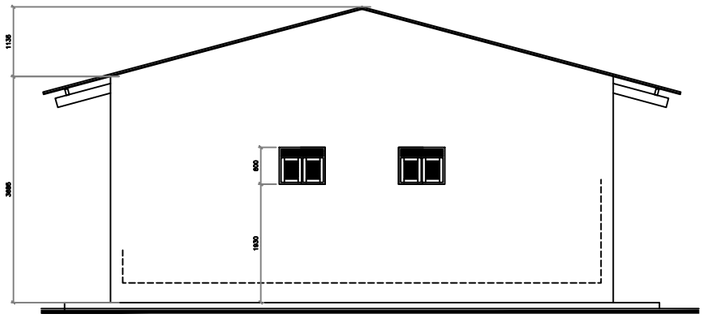

RIGHT

IOM
UN MIGRATION

PROJECT AREA : COMMUNITY REVITALIZATION	CODE : CREU02
PROJECT NAME : **EU COMMUNITY CENTER**	
LOCATION: EU COMMUNITY - CABO DELGADO - MOZAMBIQUE	PHASE : Detail Design
TITLE : **MAIN BUILDING** FLOOR PLAN AND ELEVATIONS	Drawing: **A.04**
Registered:	Date : APRIL 2022 / Scale : 1:100

Note:

- All DIMENSION AND LEVELS ARE IN mm MUST BE VERIFIED AND CHECKED AT THE SITE
- THE DOCUMENT IS PRIVATE PROPERTY.ALL RIGHTS TITLE AND INTEREST, IN THIS DOCUMENT.INCLUDING ANY AND ALL COPYRIGHTS THEREIN, ARE OWNED BY IOM- INTERNACIONAL ORGANIZATION FOR MIGRATION

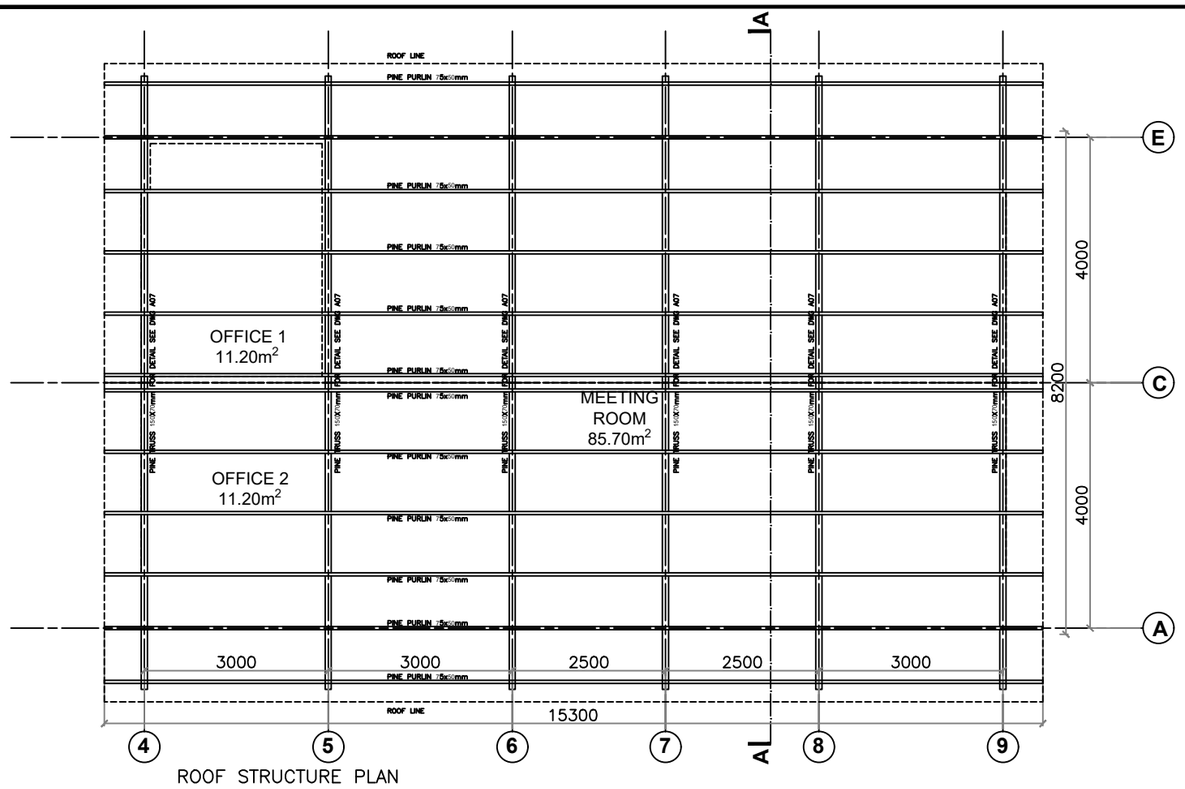

ROOF STRUCTURE PLAN

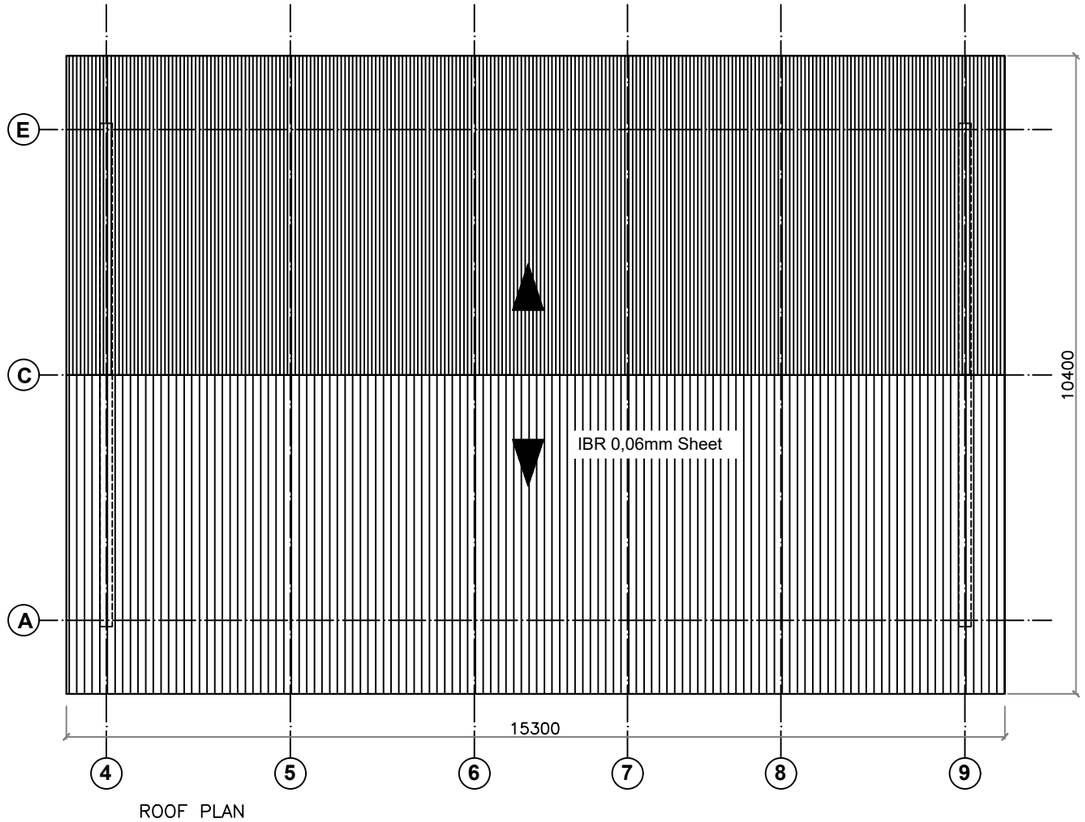

ROOF PLAN

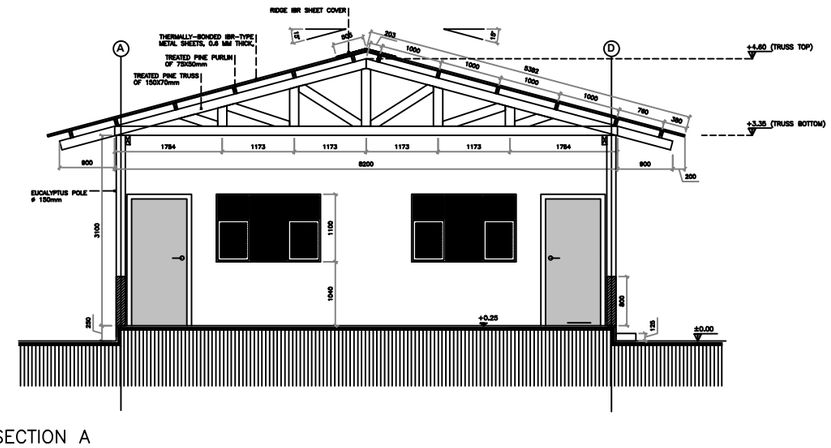

SECTION A

IOM UN MIGRATION

PROJECT AREA : COMMUNITY REVITALIZATION	CODE : CREU02
PROJECT NAME : **EU COMMUNITY CENTER**	
LOCATION: EU COMMUNITY - CABO DELGADO - MOZAMBIQUE	PHASE : Detail Design
TITLE : **MAIN BUILDING** ROOF STRUCTURE PLANS	Drawing: **A.05**
Registered:	Date : APRIL 2022 / Scale : 1:100

Note:

- All DIMENSION AND LEVELS ARE IN mm MUST BE VERIFIED AND CHECKED AT THE SITE
- THE DOCUMENT IS PRIVATE PROPERTY.ALL RIGHTS TITLE AND INTEREST, IN THIS DOCUMENT.INCLUDING ANY AND ALL COPYRIGHTS THEREIN, ARE OWNED BY IOM- INTERNACIONAL ORGANIZATION FOR MIGRATION

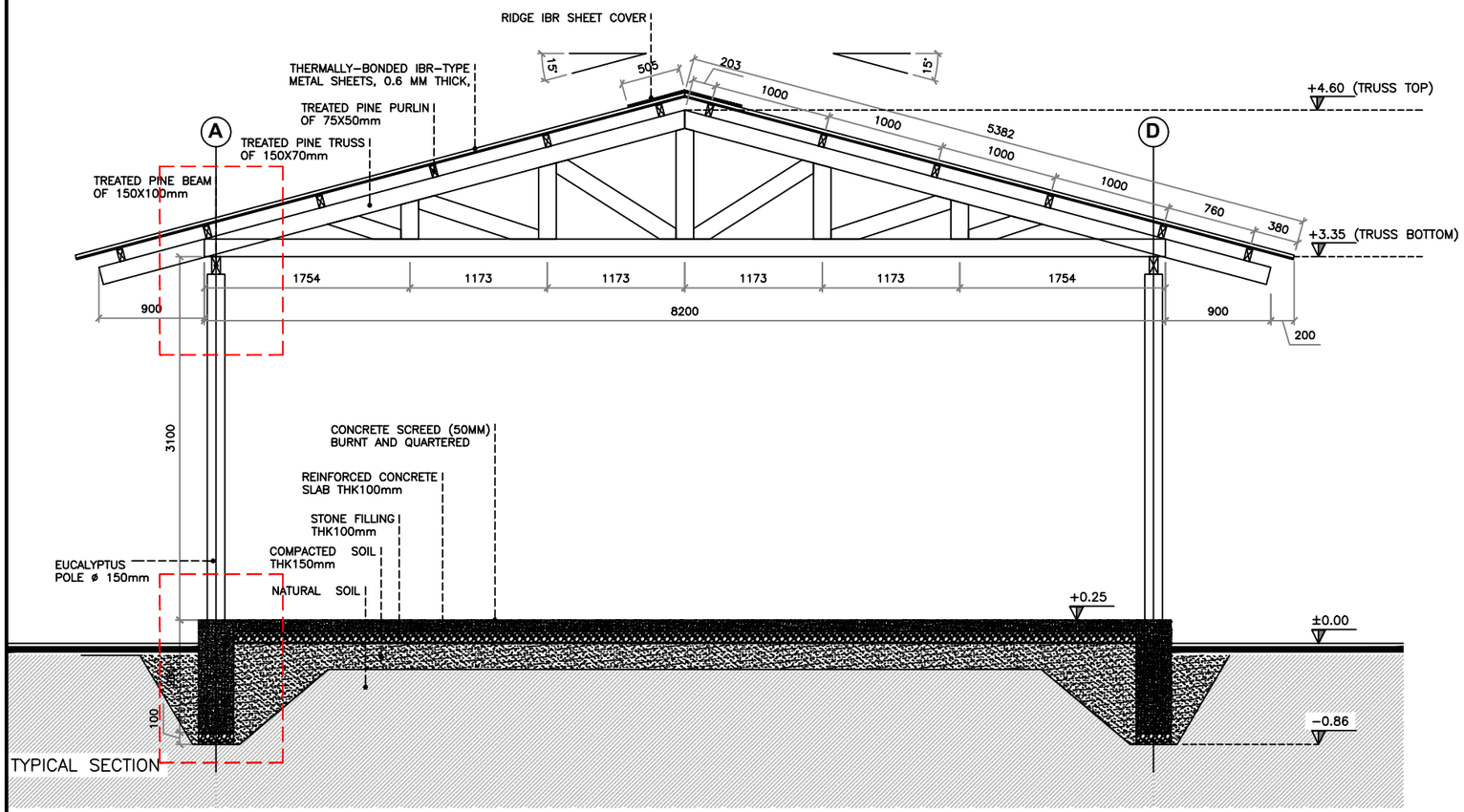

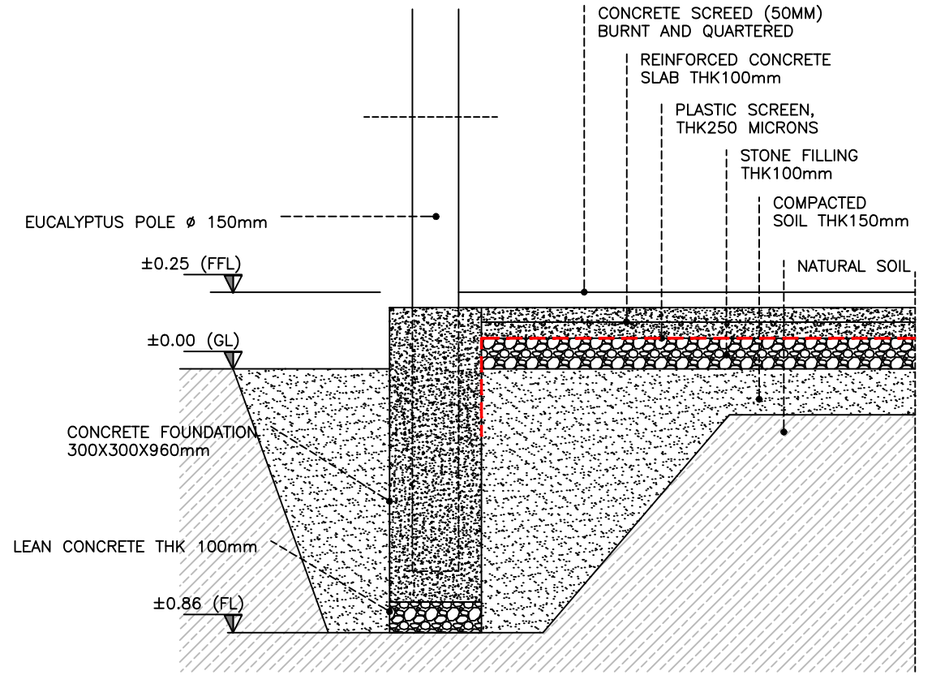

TYPICAL EUCALYPTUS COLUMN SECTION

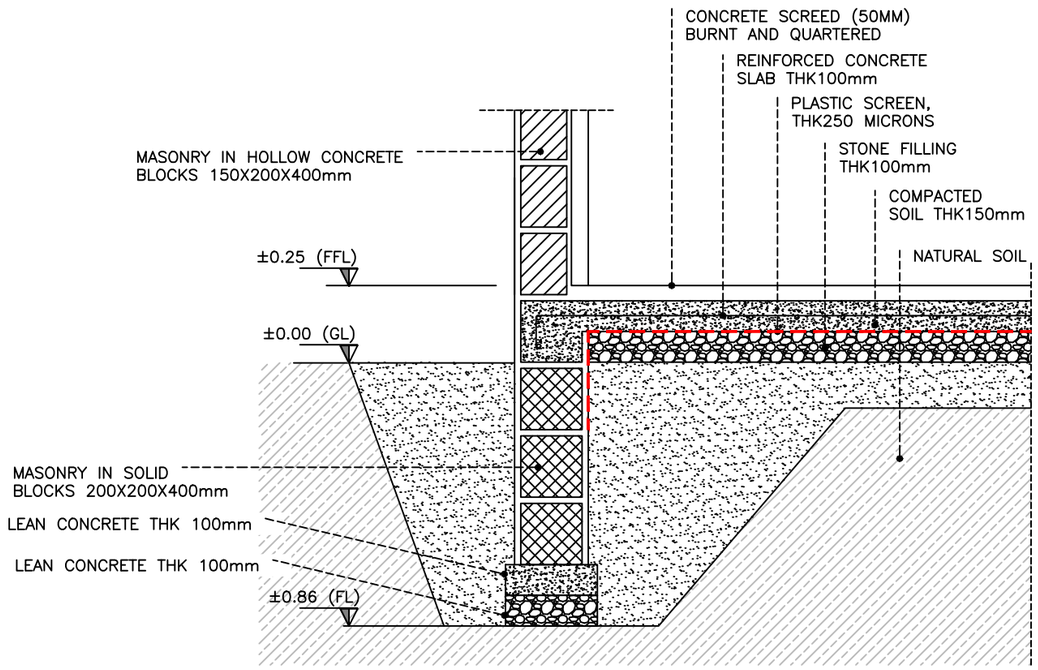

TYPICAL WALL SECTION

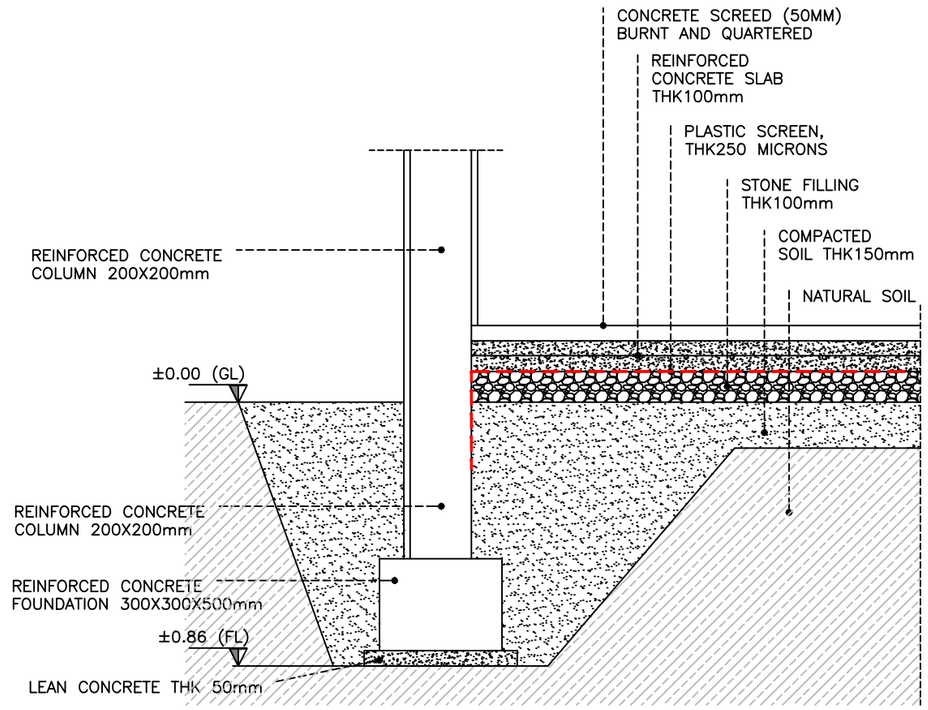

TYPICAL CONCRETE COLUMN SECTION

IOM UN MIGRATION

PROJECT AREA : COMMUNITY REVITALIZATION	CODE : CREU02
PROJECT NAME : **EU COMMUNITY CENTER**	
LOCATION: EU COMMUNITY - CABO DELGADO - MOZAMBIQUE	PHASE : Detail Design
TITLE : **MAIN BUILDING** FOUNDATION DATAILS	Drawing: **A.06**
Registered:	Date : APRIL 2022 / Scale : 1:20/1:50

Note:

- All DIMENSION AND LEVELS ARE IN mm MUST BE VERIFIED AND CHECKED AT THE SITE
- THE DOCUMENT IS PRIVATE PROPERTY.ALL RIGHTS TITLE AND INTEREST, IN THIS DOCUMENT.INCLUDING ANY AND ALL COPYRIGHTS THEREIN, ARE OWNED BY IOM- INTERNACIONAL ORGANIZATION FOR MIGRATION

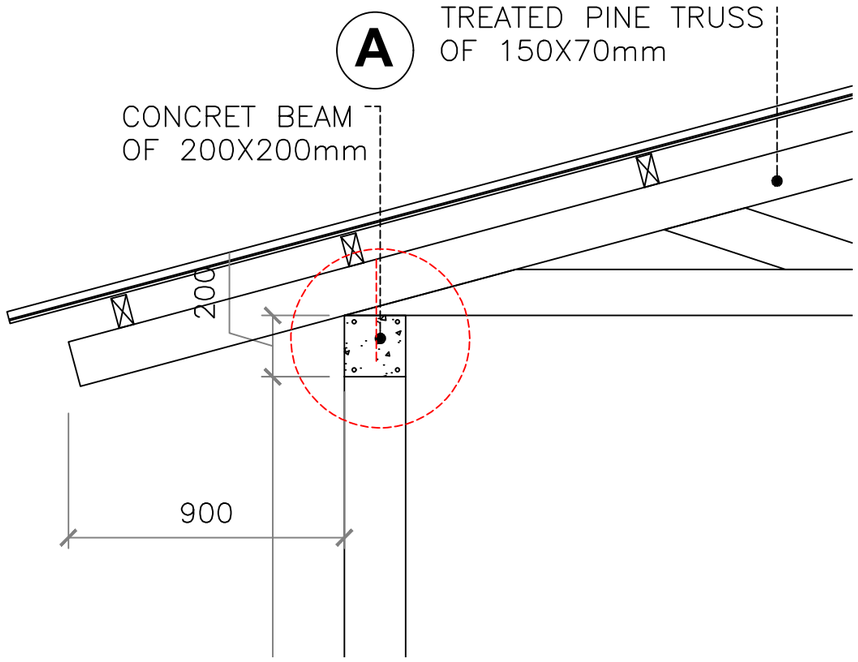

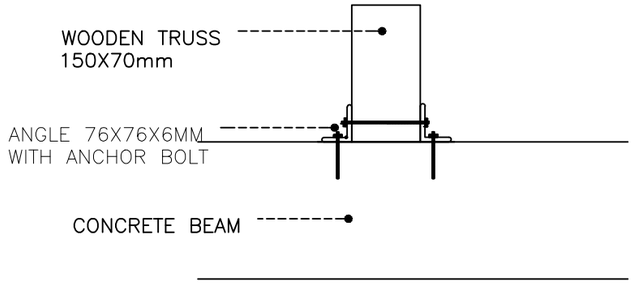

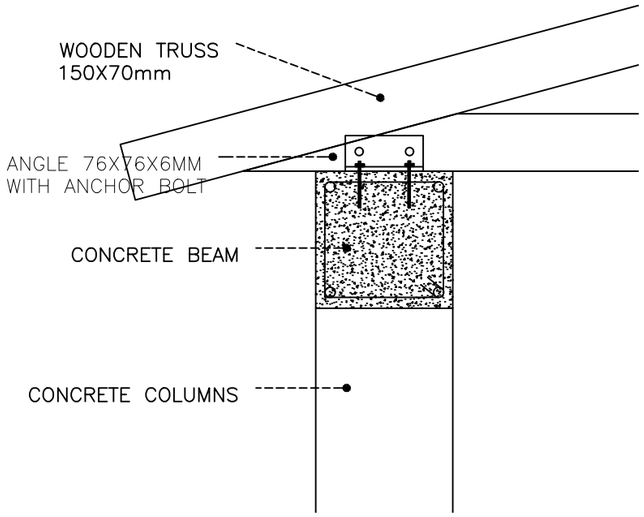

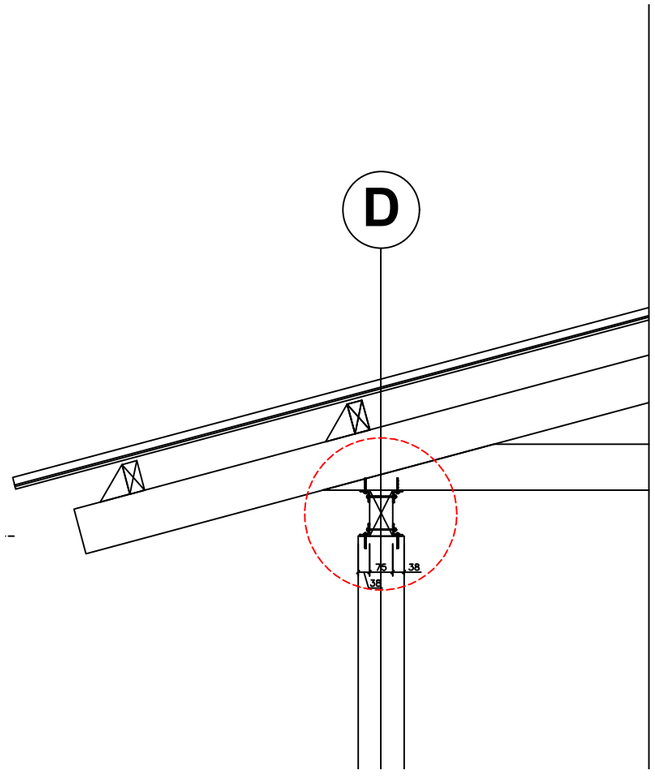

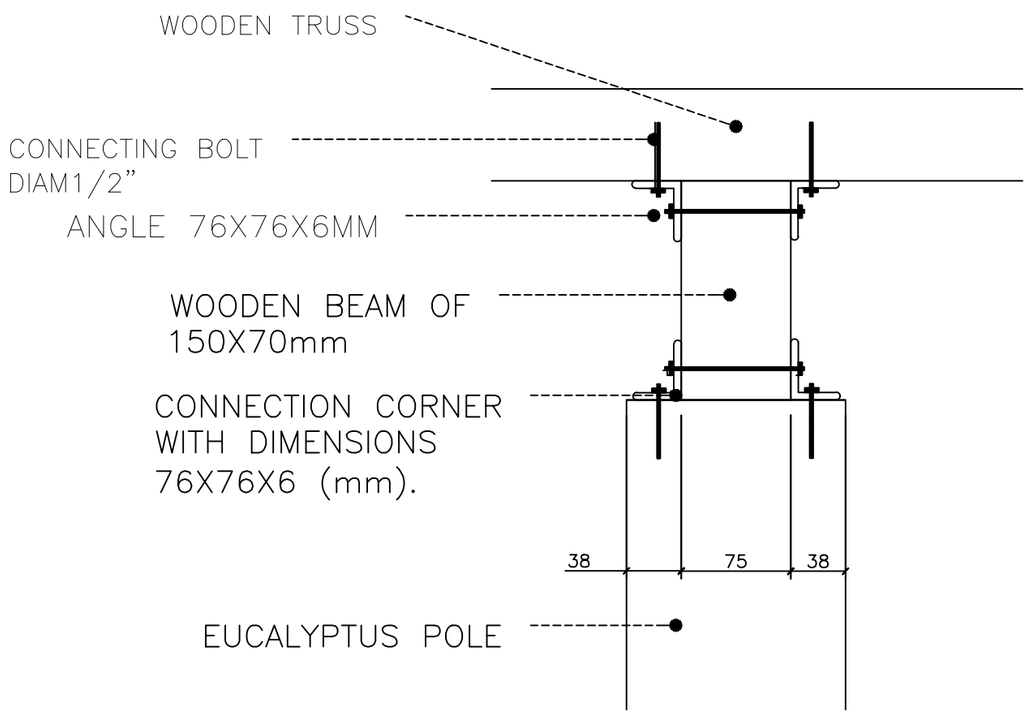

IOM
UN MIGRATION

PROJECT AREA : COMMUNITY REVITALIZATION	CODE : CREU02
PROJECT NAME : **EU COMMUNITY CENTER**	
LOCATION: EU COMMUNITY - CABO DELGADO - MOZAMBIQUE	PHASE : Detail Design
TITLE : **CONNECTIONS DETAILS** TRUSS AND COLUMNS	Drawing: **A.07**
Registered: / Date : APRIL 2022	Scale : 1:20/1:50

Note:

- All DIMENSION AND LEVELS ARE IN mm MUST BE VERIFIED AND CHECKED AT THE SITE
- THE DOCUMENT IS PRIVATE PROPERTY.ALL RIGHTS TITLE AND INTEREST, IN THIS DOCUMENT.INCLUDING ANY AND ALL COPYRIGHTS THEREIN, ARE OWNED BY IOM- INTERNACIONAL ORGANIZATION FOR MIGRATION

TRUSS

TRUSS (DESIGNATION)		DETAIL
LENGTH (mm)	8200	
HEIGHT (mm)	1250	
TOTAL IN BUILDING (un)	6	

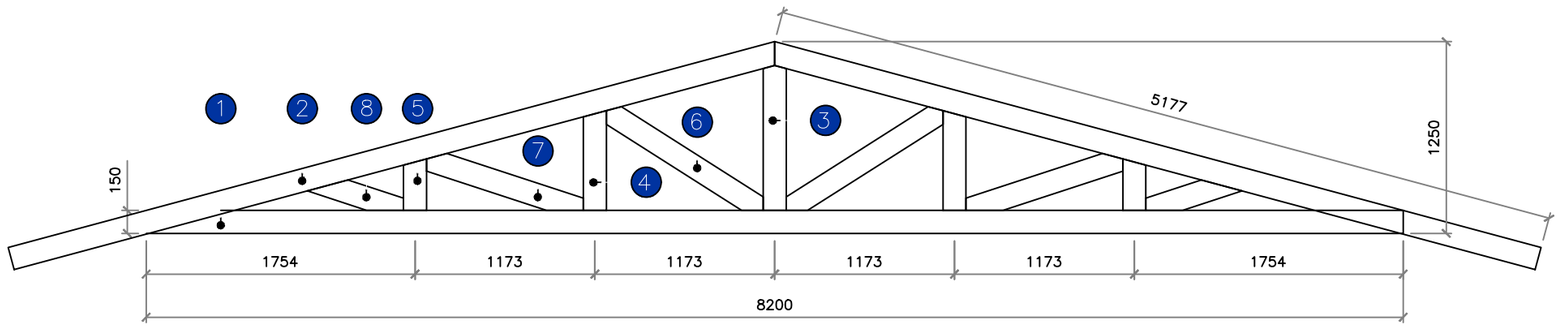

RAFTERS

RAFTER (DESIGNATION)	1	DETAIL
LENGTH (mm)	8200	
TOTAL IN TRUSS (un)	1	
TOTAL IN BUILDING (un)	6	

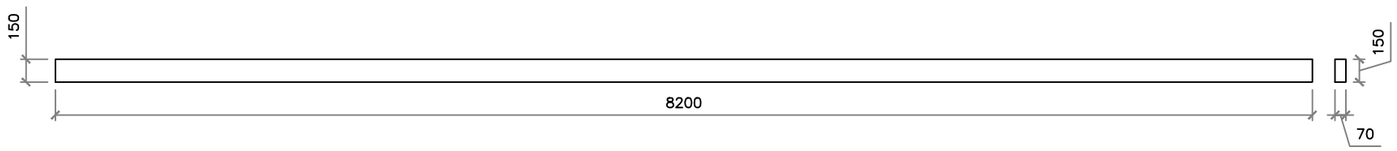

RAFTER (DESIGNATION)	2	DETAIL
LENGTH (mm)	5177	
TOTAL IN TRUSS (un)	2	
TOTAL IN BUILDING (un)	12	

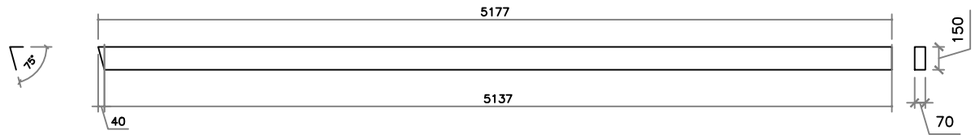

RACKS

RACKS (DESIGNATION)	3	4	5	6	7	8
DETAILS	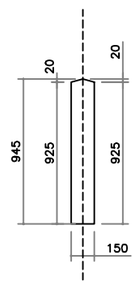	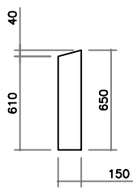	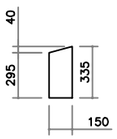	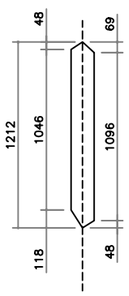	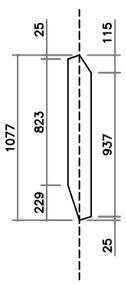	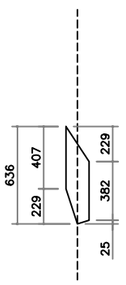
LENGTH (mm)	945	650	335	1212	1077	660
TOTAL IN TRUSS (un)	1	2	2	2	2	2
TOTAL IN BUILDING (un)	6	12	12	12	12	12

25.5m

IOM UN MIGRATION

PROJECT AREA : COMMUNITY REVITALIZATION	CODE : CREU02
PROJECT NAME : **EU COMMUNITY CENTER**	
LOCATION: EU COMMUNITY - CABO DELGADO - MOZAMBIQUE	PHASE : Detail Design
TITLE : **ROOF STRUCTURE** ROOF STRUCTURE DETAILS	Drawing: **A.08**
Registered:	Date : APRIL 2022 / Scale : 1:50/1:100

Note:

- All DIMENSION AND LEVELS ARE IN mm MUST BE VERIFIED AND CHECKED AT THE SITE
- THE DOCUMENT IS PRIVATE PROPERTY. ALL RIGHTS TITLE AND INTEREST, IN THIS DOCUMENT.INCLUDING ANY AND ALL COPYRIGHTS THEREIN, ARE OWNED BY IOM- INTERNACIONAL ORGANIZATION FOR MIGRATION

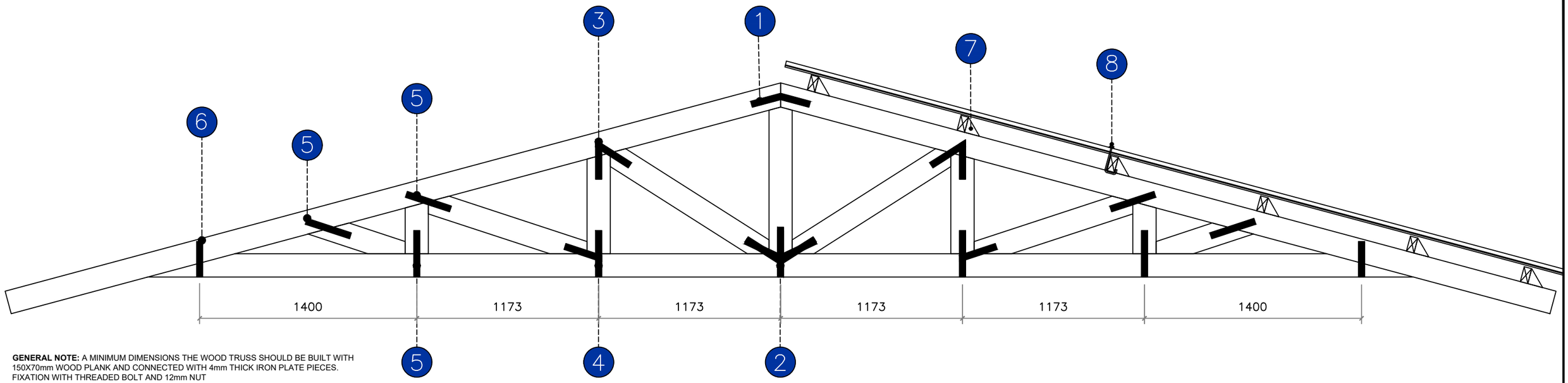

GENERAL NOTE: A MINIMUM DIMENSIONS THE WOOD TRUSS SHOULD BE BUILT WITH 150X70mm WOOD PLANK AND CONNECTED WITH 4mm THICK IRON PLATE PIECES. FIXATION WITH THREADED BOLT AND 12mm NUT

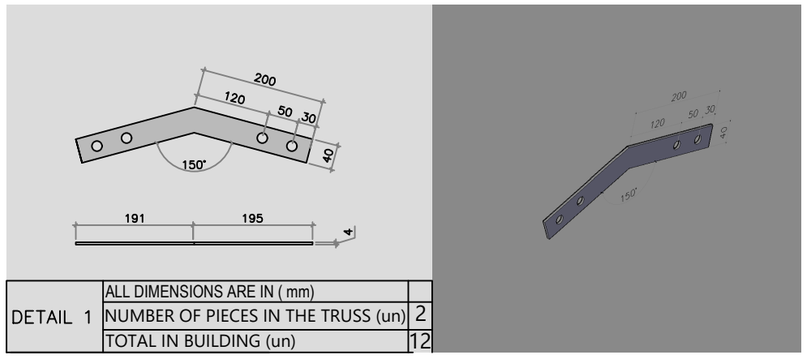

DETAIL 1	ALL DIMENSIONS ARE IN (mm)	
	NUMBER OF PIECES IN THE TRUSS (un)	2
	TOTAL IN BUILDING (un)	12

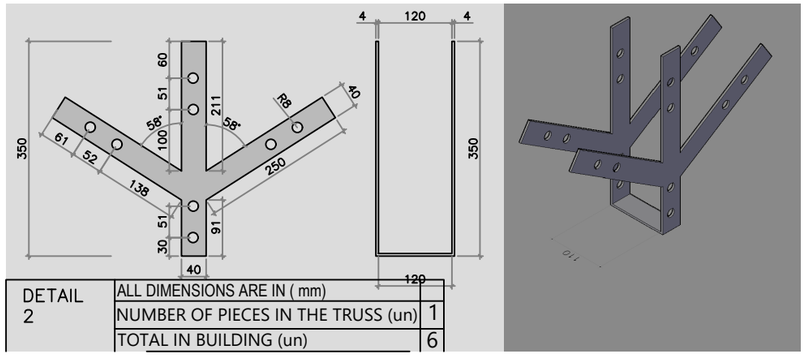

DETAIL 2	ALL DIMENSIONS ARE IN (mm)	
	NUMBER OF PIECES IN THE TRUSS (un)	1
	TOTAL IN BUILDING (un)	6

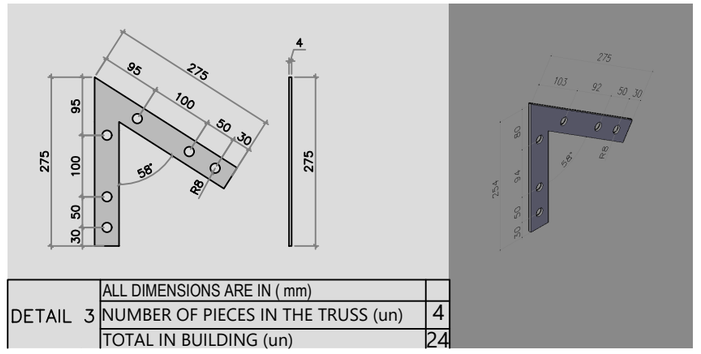

DETAIL 3	ALL DIMENSIONS ARE IN (mm)	
	NUMBER OF PIECES IN THE TRUSS (un)	4
	TOTAL IN BUILDING (un)	24

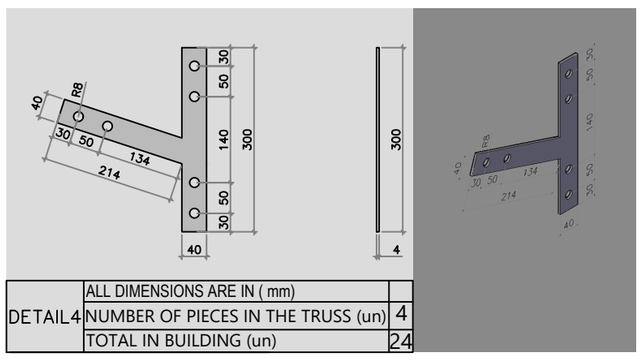

DETAIL4	ALL DIMENSIONS ARE IN (mm)	
	NUMBER OF PIECES IN THE TRUSS (un)	4
	TOTAL IN BUILDING (un)	24

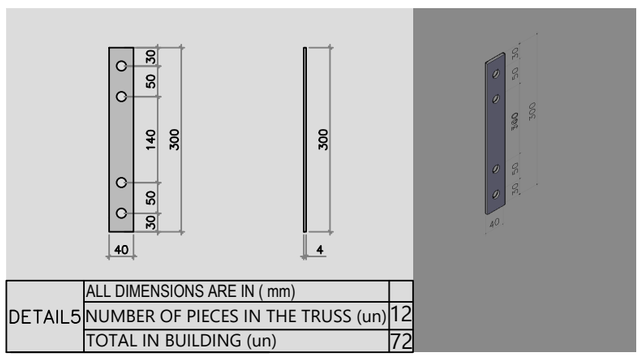

DETAIL5	ALL DIMENSIONS ARE IN (mm)	
	NUMBER OF PIECES IN THE TRUSS (un)	12
	TOTAL IN BUILDING (un)	72

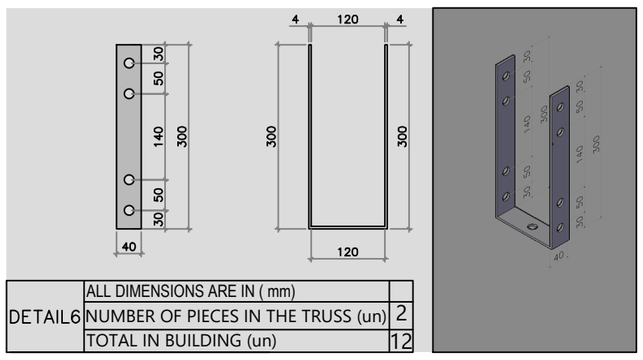

DETAIL6	ALL DIMENSIONS ARE IN (mm)	
	NUMBER OF PIECES IN THE TRUSS (un)	2
	TOTAL IN BUILDING (un)	12

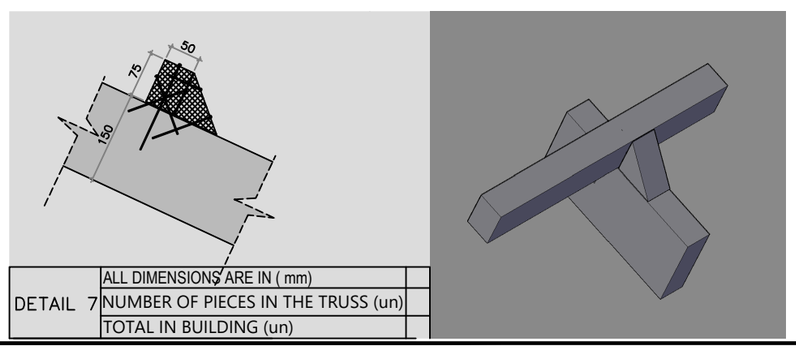

DETAIL 7	ALL DIMENSIONS ARE IN (mm)	
	NUMBER OF PIECES IN THE TRUSS (un)	
	TOTAL IN BUILDING (un)	

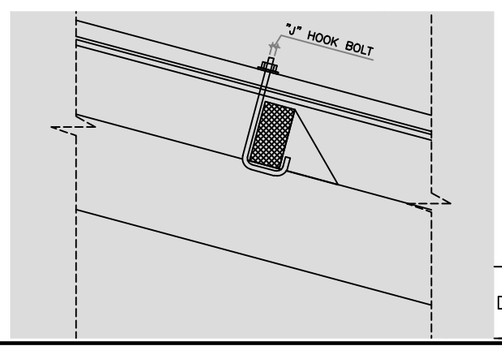

DETAIL8	ALL DIMENSIONS ARE IN (mm)	
	NUMBER OF PIECES IN THE TRUSS (un)	
	TOTAL IN BUILDING (un)	

IOM
UN MIGRATION

PROJECT AREA : COMMUNITY REVITALIZATION	CODE : CREU02
PROJECT NAME : **EU COMMUNITY CENTER**	
LOCATION: EU COMMUNITY - CABO DELGADO - MOZAMBIQUE	PHASE : Detail Design
TITLE : **ROOF STRUCTURE** CONECTIONS DETAILS	Drawing: **A.09**
Registered:	Date : APRIL 2022 / Scale : 1:50/1:100

Note:

- All DIMENSION AND LEVELS ARE IN mm MUST BE VERIFIED AND CHECKED AT THE SITE

- THE DOCUMENT IS PRIVATE PROPERTY.ALL RIGHTS TITLE AND INTEREST, IN THIS DOCUMENT.INCLUDING ANY AND ALL COPYRIGHTS THEREIN, ARE OWNED BY IOM- INTERNACIONAL ORGANIZATION FOR MIGRATION

DOOR (DESIGNATION)	D1
DETAILS	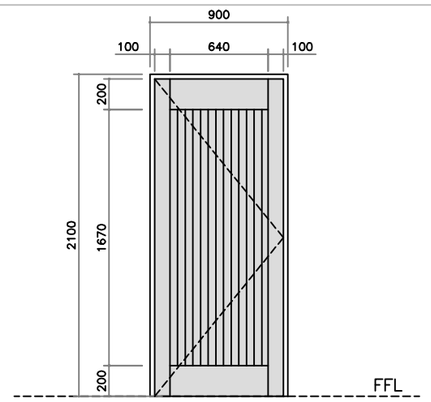
ROOM	OFFICE 1/OFFICE 2
DIMENSION	ARO/FRAME: 900X2100mm FOLHA/LEAF: 840X2070mm
MATERIAL	FIRST QUALITY CHAMFUTA HARDHOOD
DETAILS	DOBRADIÇA: EM LATÃO MACIÇO COM ANILHAS DUPLAS DO TIPO H032 100x75 HD DA "HMP" - 3 POR FOLHA HINGES: POLISHED BRASS DOUBLE WASHERS TYPE H032 100x75HD BY "HMP" – 3/LEAF ON DOOR CONJUNTO DE FECHADURA E MAÇANETA TIPO: YALE 4600 (LN) KNOB LOCKSET TYPE: YALE 4600 (LN) OR EQUIVALENT BATENTE DE PORTA DE PAVIMENTO FLOOR DOORS STOP ACABAMENTO: PINTURA A ESMALTE SOB PRIMARIO APROPRIADO FINISHING: ENAMEL PAINT ON UNDERCOAT
QTY	2

WINDOWS (DESIGNATION)	W1	W2
DETAILS	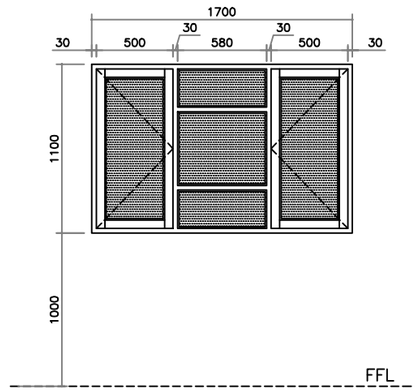	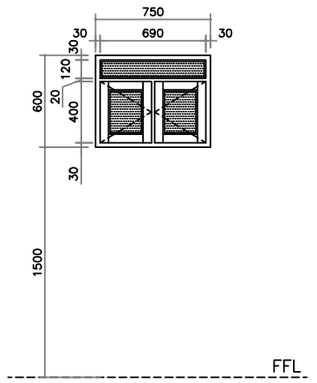
ROOM	OFFICE 1/OFFICE 2	OFFICE 1/OFFICE 2
DIMENSION	1700X1100	1200X2100
MATERIAL	FIRST QUALITY CHAMFUTA HARDHOOD	FIRST QUALITY CHAMFUTA HARDHOOD
DETAILS	GLASS: FLAT TRANSPARENT 4mm THICK *VIDRO: LISO TRANSPARENTE 4mm ESPESSURA* INSECT SCREEN: STAINLESS STEEL MESH *REDEMOSQUITEIRA: REDE EM ACO INOXIDAVEL* HINGES: POLISHED BRASS TYPE H023 75x47 "HMP" 2/LEAF (GLASS AND INSECT SCREEN) *DOBRADICA: EM LATAO DO TIPO H023 75x47 da "HMP" 2/FOLHA (VIDRO E REDE)* WINDOWS FITTINGS: POLISHED BRASS TYPE B2757 FROM "CONWAYS" 1/LEAF (GLASS AND INSECT SCREEN) *FECHOS: EM LATAO MACICO DO TIPO: B2757 DA CONWAYS 1/FOLHA (VIDRO E REDE)* STAYS: POLISHED BRASS TYPE B2764 FROM CONWAYS 1/GLASS LEAF *REGULADOR: EM LATAO MACICO DO TIPO: B2764 DA CONWAYS 1/FOLHA DE VIDRO* FINISHING: ENAMEL PAINT ON UNDERCOAT *ACABAMENTO: PINTURA ESMALTE SOB PRIMARIO*	GLASS: FLAT TRANSPARENT 4mm THICK *VIDRO: LISO TRANSPARENTE 4mm ESPESSURA* INSECT SCREEN: STAINLESS STEEL MESH *REDEMOSQUITEIRA: REDE EM ACO INOXIDAVEL* HINGES: POLISHED BRASS TYPE H023 75x47 "HMP" 2/LEAF (GLASS AND INSECT SCREEN) *DOBRADICA: EM LATAO DO TIPO H023 75x47 da "HMP" 2/FOLHA (VIDRO E REDE)* WINDOWS FITTINGS: POLISHED BRASS TYPE B2757 FROM "CONWAYS" 1/LEAF (GLASS AND INSECT SCREEN) *FECHOS: EM LATAO MACICO DO TIPO: B2757 DA CONWAYS 1/FOLHA (VIDRO E REDE)* STAYS: POLISHED BRASS TYPE B2764 FROM CONWAYS 1/GLASS LEAF *REGULADOR: EM LATAO MACICO DO TIPO: B2764 DA CONWAYS 1/FOLHA DE VIDRO* FINISHING: ENAMEL PAINT ON UNDERCOAT *ACABAMENTO: PINTURA ESMALTE SOB PRIMARIO*
QUANTITY	2	4

IOM UN MIGRATION

PROJECT AREA : COMMUNITY REVITALIZATION	CODE : CREU02
PROJECT NAME : **EU COMMUNITY CENTER**	
LOCATION: EU COMMUNITY - CABO DELGADO - MOZAMBIQUE	PHASE : Detail Design
TITLE : **ALL BUILDINGS** DOOR SCHEDULE	Drawing: **A.10**
Registered: / Date : APRIL 2022	Scale : 1:50

Note:

- All DIMENSION AND LEVELS ARE IN mm MUST BE VERIFIED AND CHECKED AT THE SITE
- THE DOCUMENT IS PRIVATE PROPERTY.ALL RIGHTS TITLE AND INTEREST, IN THIS DOCUMENT.INCLUDING ANY AND ALL COPYRIGHTS THEREIN, ARE OWNED BY IOM- INTERNACIONAL ORGANIZATION FOR MIGRATION

Client: International Organization for Migration (IOM) / Organização Internacional para as Migrações (OIM)

Work: Construction a standarized Community Center / Construção de um Centro Comunitário Standarizado

Local: Tchovera - Namuno - Cabo Delegado

Date: May 12, 2022

International Organization for Migration (IOM)
The UN Migration Agency

SUMMARY OF BUDGET

SECTION	DESCRIPTION	DESCRICAO	TOTAL AMMOUNT (MZN)	TOTAL AMMOUNT (USD)
CHAP 01	PRELIMINARIES (EARTHWORKS & FOUNDATIONS)	PRELIMINARES (MOVIMENTO DE TERRA & FUNDACAO)	0.00	
CHAP 02	PAVEMENTS FLOOR	PAVIMENTO	0.00	
CHAP 03	EXTERNAL & INTERNAL WALLS	PAREDES EXTERNAS E INTERNAS	0.00	
CHAP 04	ROOFING	COBERTURA	0.00	
CHAP 05	PAVEMENTS AND WALL FINISHES	ACABAMENTO DE PAVIMENTO E PAREDES	0.00	
CHAP 06	CARPENTRY	CARPINTARIA	0.00	
CHAP 07	ELECTRICITY	ELECTRICIDADE	0.00	
	TOTAL		**0.00**	USD 0.00
	VAT(17%)		*0.00*	
	TOTAL AMOUNT		**0.00**	**USD 0.00**

Art.	Description of Activities	Descrição das Actividades	UN	QTY	Cost Estimate Unit.	Cost Estimate Total
	VERY IMPORTANT NOTE: **The cost mentioned in the BoQ should always include all related works (Mobilization, demobilization, Hiring technician staff and applying HSST protocols for safety and Security, with a First Aid kit to be at the site, also this should be considered for the temporary fencing, fire Extinguishers, work plate, and hiring the needed equipment on timely basis)**	**NOTA MUITO IMPORTANTE:** **O custo mencionado no MQ deve sempre incluir todos os trabalhos relacionados (Mobilização, desmobilização, Contratação de pessoal técnico e aplicação dos protocolos HSST de segurança e protecção, com um kit de primeiros socorros a estar no local, também isto deve ser considerado para as vedações temporárias, Extintores de incêndio, placa de obra e contratação atempada do equipamento necessário)**				
01	**PRELIMINARIES (EARTHWORKS & FOUNDATIONS)**	**PRELIMINARES (MOVIMENTO DE TERRA & FUNDACAO)**			**Insert your cost proposal**	
1.1	Excavation and backfill in foundation trenches, 400mm wide, depth > 850mm, including watering and compaction of the foundation beds and backfilling shall be done as instructed by the site engineer and in layers not more than 200mm thick and well compacted with earth compactor or compactor (95% AASTHO). Transport for surplus waste material, if required, should be included.	Escavação e aterro em valas de fundação, com largura de 400mm, profundidade > 850mm, incluindo rega e compactação dos leitos das fundações e o enchimento de fundo deve ser feito de acordo com as instruções do engenheiro do local e em camadas não superiores a 200mm de espessura e bem compactado com compactador de terra ou compactador (95% AASTHO). O transporte para os resíduos de material excedente, se necessário, deve ser incluído.	m³	**14.03**		MZN -
1.2	Anti-termite treatment, with a 10-year guarantee, whose certificate must be shared by the contractor.	Tratamento anti-térmites, com garantia de 10 anos, cujo o certificado devera ser partilhado pelo empreteiro.	m²	**116.44**		MZN -
1.3	Providing and laying of 100mm of rockfill in median stones at the base of foundation …(cb meter)	Fornecimento e aplicação de 100 mm de enrocamento em pedra mediana em base de fundações.	m³	**1.65**		MZN -
1.4	Providing & Laying of Lean Concrete (Class B15) 50mm thick in underneath foundation …(cb meter)	Betao vibrado de classe B15 para Betao de limpeza com 50mm de espessura	m³	**0.83**		MZN -
1.5	Supply and placement of simple B25 concrete in the foundation footings, including all necessary works	Fornecimento e colocação de Betão simples B25 nas sapatas de fundacao, incluindo todos os trabalhos necessários				
1.5.1	Concrete …(cb meter) (300x300x1100mm)x15 foundation footings	Betao (300x300x1000mm)x15 sapatas	m³	**1.35**		MZN -
1.6	Providing and laying of 200mm foundation walls with filled cement/concrete blocks, C.M. 1:5, including all necessary and complementary works. …(sq meter)	Fornecimento e assentamento de paredes de 400x200x200mm em blocos macissados, assentes com argamassa de cimento e areia ao traço 1:5 'incluindo todos os trabalhos complementares	m²	**30.00**		MZN -
	Sub-total of Earthworks & Foundations	***Sub-total de Movimento de Terra e Fundações***				***MZN -***
CHAP 02	**PAVEMENTS FLOOR**	**PAVIMENTO**				
2.1	Providing and laying of 100mm of rockfill in median stones at the pavements, with the compacting, dimentions of (19~38mm)	Fornecimento e colocação de 100mm de enrocamento, brita mediana na caixa de pavimento, com a compactação, dimensões de (19~38mm)	m³	**11.53**		MZN -
2.2	Supply and assembling of plastic screen, GLUNPLUS USB GREEN or HYPERLASTIC ORANGE, 250 microns thickness	Fornecimento e montagem de membranda de polietileno/tela plástica, GLUNPLUS USB GREEN ou HYPERLASTIC ORANGE, 250 microns de espessura, para impermeabilizacao.	m²	**116.44**		MZN -
2.3	Providing and aplication of electrowelded mesh ref.AR75 300X300X60 mm, for ground floor slab, including chocks spacers, knotting wire, folds, hooks, splices, waste, and all necessary works and materials.	Fornecimento e aplicação de malha electrosoldada ref.AR75 300X300X60, para laje de pavimento, incluindo espaçadores de calços, arame de atar, dobras, ganchos, emendas, sobreposições, e todos os trabalhos e materiais necessários.	m²	**116.44**		MZN -
2.4	Supply and placement of concrete B25, including all the necessary works for the construction of pavement slab with 100mm thickness	Fornecimento e colocação de betão B25, incluindo todas as obras necessárias para a construção de laje de pavimento com 100mm de espessura	m³	**11.64**		MZN -
	Sub-total of Pavement Floor	***Sub-total do Pavimento***				***MZN -***
CHAP 03	**EXTERNAL & INTERNAL WALLS**	**PAREDES INTERNAS & EXTERNAS**				
3.1	Providing and laying of 200x150x400mm masonry of hollow blocks, in external walls, laid with cement mortar and sand; including all necessary and complementary works. …(sq meter)	Fornecimento e assentamento de alvenarias em blocos vazados de cimento e areia com 400x200x150mm, em paredes, assentes com argamassa de cimento e areia	m²	**83.10**		MZN -
3.3	Supply and placement of B25 reinforced concrete in the pillars, including all the necessary work (cutting, shaping, placement and assembly of reinforcement in A400 NR steel bars, including shims, tying wire, bends, hooks, splices, overlaps, waste)	Fornecimento e colocação de Betão armado B25 nos pilares, incluindo todos os trabalhos necessários (corte, moldagem, colocação e montagem de armaduras em varão de aço A400 NR, incluindo calços, arame de atar, dobras, ganchos, empalmes, sobreposições, desperdícios)				
3.3.1	Concrete …(cb meter) (200x200x3100mm)x6	Betao (200x200x4100mm)x6	m³	**0.98**		MZN -
3.3.2	Ø6 …(kg) (pillar)	Ø6 (pilar)	kg	**36.91**		MZN -
3.3.3	Ø10 …(kg) (pillar)	Ø10 (pilar)	kg	**66.62**		MZN -
3.4	Supply and placement of circular wooden pillars (treated with carbolim, creosote or similar), with dimensions of 4500mm high, diameter between 150 and 160mm, with metal supports for fixing to the foundation base according to the drawings, including all the necessary work for fixing and anchoring in the mortared area.	Fornecimento e colocação de pilares circulares em madeira (tratada com carbolim, creosoto ou similar), com dimensoes de 4500mm de altura, diametro entre 150 a 160mm, com suportes metalicos para fixacao a base de fundacao segundo os desenhos, incluindo todos os trabalhos necessarios para a fixacao e ancoragem na zona argamassada.	each	**9.00**		MZN -
3.5	Wooden beam (pine or similar), 150x75mm/150x70mm section, well worked, with opposing joints inside the eucalyptus pillars anchored with a 12mm or 16mm diameter threaded screw. (The unit is 6000mm long)	Viga em Madeira (Pinho ou similar), seccao 150x75mm/150x70mm, bem trabalhado, com juntas contrapostas no interior dos pilares em eucalipto ancorados com parafuso roscado diamentro 12mm ou 16mm. (A unidade tem 6000 m de comprimento)	un	**6.00**		MZN -
3.6	Supply and placement of B25 reinforced concrete in the corroding beams, including all the necessary work (cutting, shaping, placement and assembly of reinforcement in A400 NR steel bars, including shims, tying wire, bends, hooks, impalement, overlaps, waste)	Fornecimento e colocação de Betão armado B25 nas vigas de corroamento, incluindo todos os trabalhos necessários (corte, moldagem, colocação e montagem de armaduras em varão de aço A400 NR, incluindo calços, arame de atar, dobras, ganchos, empalmes, sobreposições, desperdícios)				
3.6.1	Concrete …(cb meter) (200x200x25750mm)	Betao (200x200x25750mm)	m³	**1.02**		MZN -
3.6.2	Ø12 …(kg)	Ø12	kg	**101.80**		MZN -
3.6.3	Ø6 …(kg)	Ø6	kg	**26.62**		MZN -
	Sub-total of External & Internal Walls	***Sub-total de Paredes Externas e Internas***				***MZN -***
CHAP 04	**ROOFING**	**COBERTURA**				
4.1	Supply and laying of wood truss, 150x50mm section. Includes assembly, connections (metalic and nails/screws) and painting (two coats of creosote), according to the structural project	Fornecimento e assentamento de treliça em madeira, de seccao 150x50mm. Inclui montagem, conexões (metalicas e pregos/parafusos) e pintura (duas camadas de creosoto), de acordo com o projeto estrutural	each	**6.00**		MZN -
4.2	Supply and laying of wooden purlins (50x75mm). Including assembly, connections (metal and nails/screws) and painting (two coats of creosote).	Fornecimento e assentamento de madres de madeiraa (50x75mm). Incluindo montagem, conexões (metalicas e pregos/parafusos) e pintura (duas camadas de creosoto).	ml	**183.60**		MZN -
4.3	Providing and laying of IBR 686 Chromadeck sheet with 0.6mm, including all fixing elements, according to the manufacturer's recommendations. i=15°…(sq meter)	Fornecimento e assentamento de chapa de cobertura IBR 686 Chromadeck com 0.6mm, incluindo todos elementos de fixação conforme as recomendações do fabricante, i=15°	m²	**177.48**		MZN -
4.4	Providing and laying Ridge in IBR 686 Chromadeck 0,6mm sheet …(meter)	Fornecimento e assentamento de Cumeeira em chapa IBR686 Chromadeck 0,6mm.	ml	**15.30**		MZN -
	Sub-total of Roofing	***Sub-total de Cobertura***				***MZN -***
CHAP 05	**PAVEMENTS AND WALL FINISHES**	**ACABAMENTO DE PAVIMENTO E PAREDES**				
	Plastering on walls	Reboco em paredes				

5.1	Execution of 2.5cm thick plaster on walls, columns, and beams, properly leveled with cement mortar and sand to the mix design line 1:4; including roughcast with cement mortar and sand 1:3. …(sq meter)	Execução de reboco com 2.5cm de espessura em paredes, pilares e vigas devidamente regularizado com argamassa de cimento e areia ao traço 1:4, incluindo chapiscos com argamassa de cimento e areia ao traço 1:3.	m²	**83.53**		MZN -
	Floor Finishes	Acabamentos em Pavimento				
5.2	Execution of concrete (20mm) stroked and quartered, on indoor floor, with cement mortar and sand, in the line 1:4 …(sq meter)	Execução de betonilha (20 mm) interios afagada e esquartelada em pavimento exterior, com argamassa de cimento e areia ao traço 1:4	m²	**11.64**		MZN -
	Paintings	Pinturas				
5.4	Painting of external walls with two coats of top quality Exterior Plastic paint (from the CIN, PLASCON or NEUCE brand) preceded by preparation of the undercoated wall, in a color to be chosen by the Owner. Including all surface preparation activities. …(sq meter). Practical spread rate: 4-6 m²/L per coat	Pintura de paredes exteriores a duas demãos de tinta Plástica Exterior de primeira qualidade (da marca CIN), antecedida de preparação da parede com subcapa, de cor a escolher pelo Dono da Obra. Incluindo todas as actividades de preparacão das superfícies. Rendimento prático: 4-6 m²/L por demão	m²	**83.53**		MZN -
5.5	Painting of external walls with two coats of top quality Exterior Plastic paint (from the CIN, PLASCON or NEUCE brand) preceded by preparation of the undercoated wall, in a color to be chosen by the Owner. Including all surface preparation activities. …(sq meter). Practical spread rate: 4-6 m²/L per coat	Pintura de paredes interiores a duas demãos de tinta Plástica Exterior de primeira qualidade (da marca CIN, PLASCON ou NEUCE), antecedida de preparação da parede com subcapa, de cor a escolher pelo Dono da Obra. Incluindo todas as actividades de preparacão das superfícies.Rendimento prático:4-6 m²/L por demão.	m²	**83.53**		MZN -
	Sub-total of Pavements & Wall Finishes	***Sub-total de Acabamentos de Pavimentos e Parede***				***MZN -***
CHAP 06	**CARPENTRY**	**CARPINTARIA**				
6.1	Supply and assembling chanfuta wooden windows, including all fixing acessories, and all works for good finishing	Fornecimento e montagem de janelas de madeira chanfuta, incluindo todos os acessórios de fixação, e todos os trabalhos para um bom acabamento:				
6.1.1	W1 (1,70x1,10)	J1 (1,70x1,10)	un	**2.00**		MZN -
6.1.2	W2 (0,75x0,60)	J2 (0,75x0,60)	un	**2.00**		MZN -
6.2	Providing and fixing varnished chamfuta wooden doors; including all acessories, door fittings and jambs, according to the spans map and/or manufacturer's recommendations.	Fornecimento e Assentamento de portas de madeira Chanfuta envernizada, incluindo todos acessorios e ferragens, batentes de acordo com o Mapa de Vãos e recomendações do fabricante.				
6.2.1	D1 (0.9x2.10) …(each)	P1 (0.9x2.10)	each	**2.00**		MZN -
	Sub-total of Carpentry	***Sub-total de Carpintaria***				***MZN -***
CHAP 07	**ELECTRICITY**	**ELECTRICIDADE**				
	Solar lights	Iluminacoes Solares				
7.1	Supply and assembling of solar lights; including all necessary acessories, fixings and conections and complementary works and materials, with 50W of power	Fornecimento e montagem de luzes solares; incluindo todos os acessórios necessários, fixações e ligações e trabalhos e materiais complementares, com 50W de potência	un	**4.00**		0.00
	Sub-total of Electricity	***Sub-total de Electricidade***				***MZN -***
	Total Ammount for Administrative Building					**MZN -**

CABO DELGADO-NAMUNO-TCHOVERA

Namuno District is a district of Cabo Delgado Province in northern Mozambique. It covers 6,037 km² with 211,737 inhabitants

Legend

- Estrada que da acesso a comunidade de Tchovera
- TERRENO

TCHOVERA PRIMARY SCHOOL

LAND FOR CONSTRUCTION OF THE COMMUNITY CENTRE WITH DIMENSIONS 20X30 METRES.

20.00

30.00

E 38°58'37.92"

ROAD LEADING TO NAMUNO, WHICH IS 35 KM FROM NAMUNO.

N

Google Earth

Image © 2022 CNES / Airbus

IOM UN MIGRATION

PROJECT AREA : EU - COMMUNITY CENTER	CODE : CRUS10
PROJECT NAME : **TYPICAL COMMUNITY CENTER**	
LOCATION: TCHOVERA COMMUNITY - NAMUNO CABO DELGADO - MOZAMBIQUE	PHASE : Detail Design
TITLE : **ALL BUILDINGS** LOCATION PLAN	Drawing: -
Registered:	Date : APRIL 2021 / Scale : 1:100

Note:

- All DIMENSION AND LEVELS ARE IN mm MUST BE VERIFIED AND CHECKED AT THE SITE
- THE DOCUMENT IS PRIVATE PROPERTY .ALL RIGHTS TITLE AND INTEREST, IN THIS DOCUMENT.INCLUDING ANY AND ALL COPYRIGHTS THEREIN, ARE OWNED BY IOM- INTERNACIONAL ORGANIZATION FOR MIGRATION

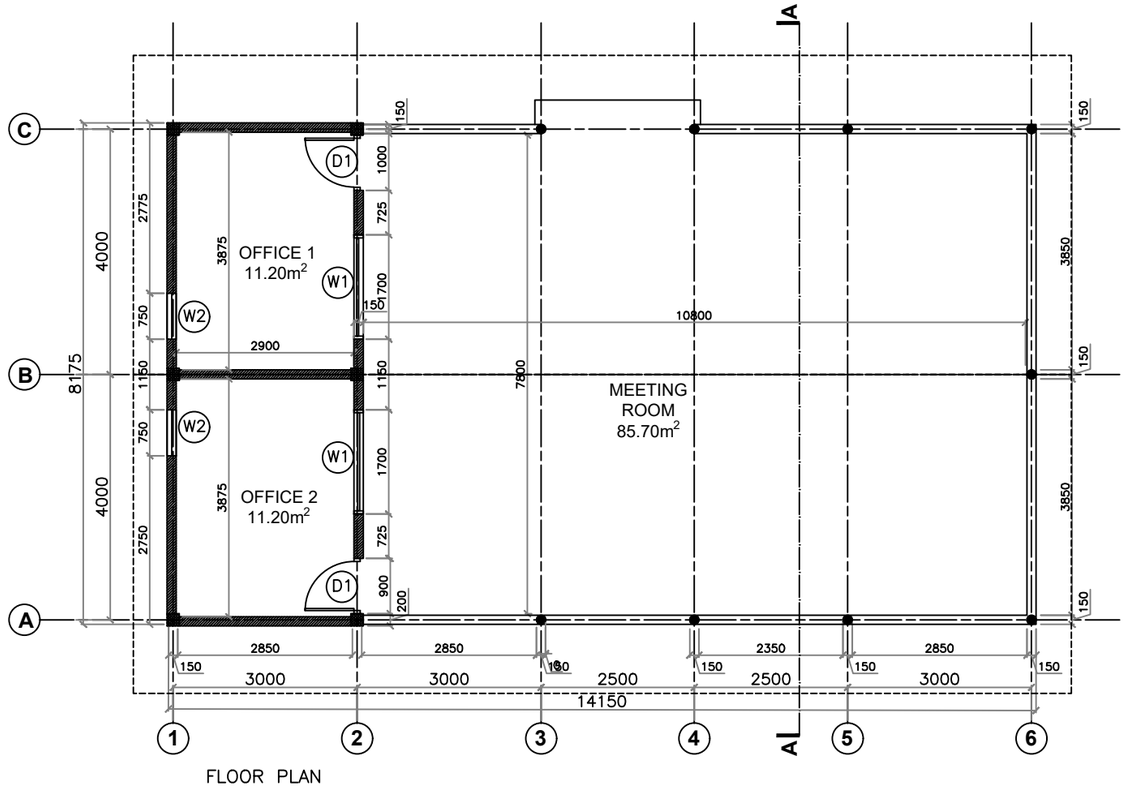

FLOOR PLAN

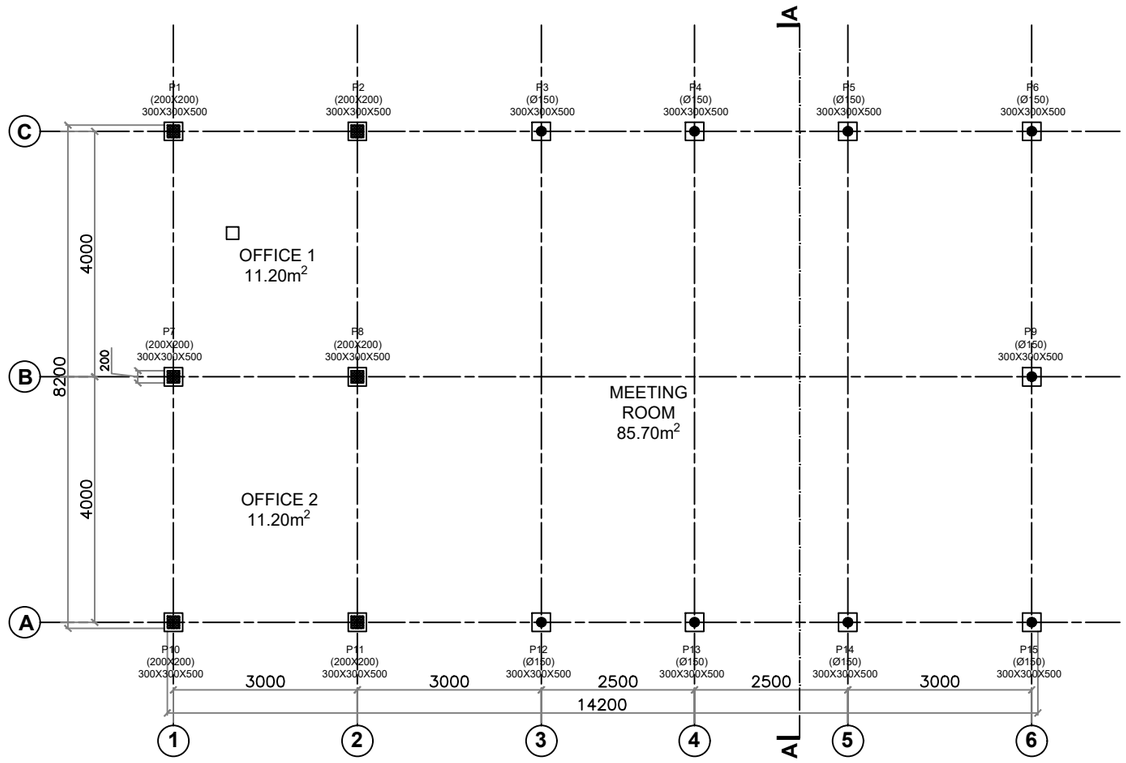

FOUNDATION LEVEL −0,85

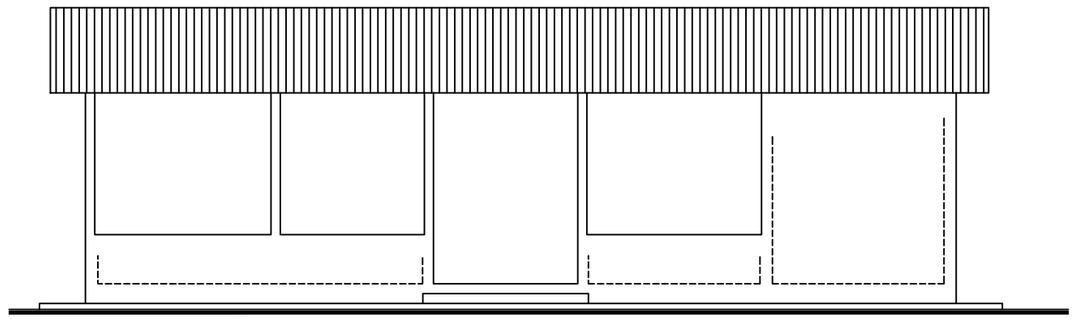

FRONT

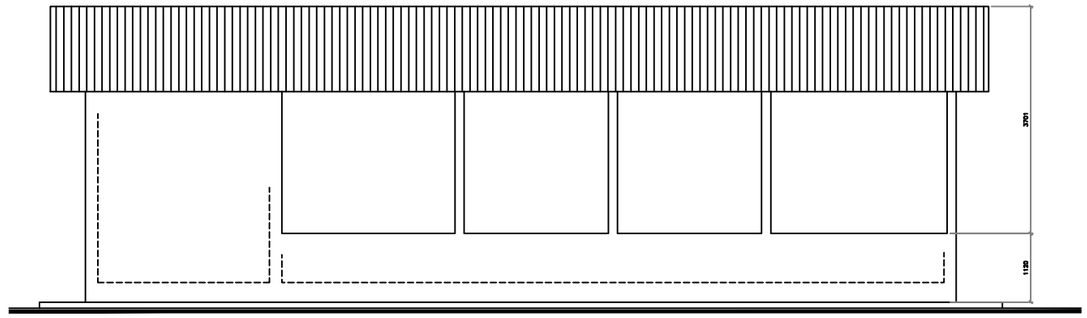

BACK

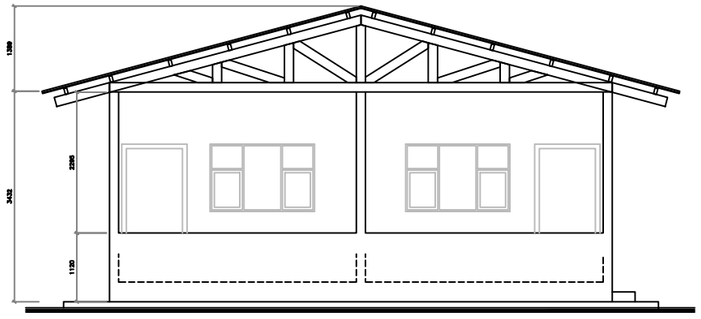

LEFT

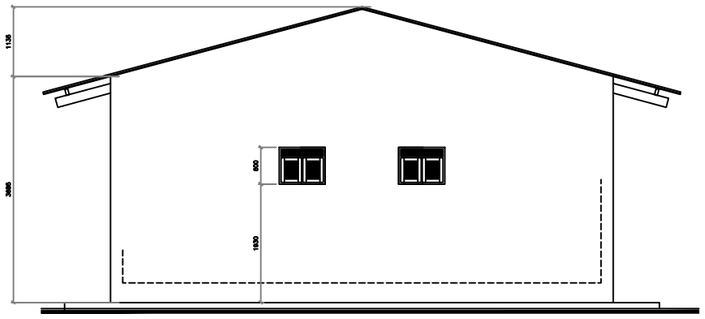

RIGHT

IOM
UN MIGRATION

PROJECT AREA : COMMUNITY REVITALIZATION	CODE : CREU02
PROJECT NAME : **EU COMMUNITY CENTER**	
LOCATION: EU COMMUNITY - CABO DELGADO - MOZAMBIQUE	PHASE : Detail Design
TITLE : **MAIN BUILDING** FLOOR PLAN AND ELEVATIONS	Drawing: **A.04**
Registered:	Date : APRIL 2022 / Scale : 1:100

Note:

- All DIMENSION AND LEVELS ARE IN mm MUST BE VERIFIED AND CHECKED AT THE SITE
- THE DOCUMENT IS PRIVATE PROPERTY.ALL RIGHTS TITLE AND INTEREST, IN THIS DOCUMENT.INCLUDING ANY AND ALL COPYRIGHTS THEREIN, ARE OWNED BY IOM- INTERNACIONAL ORGANIZATION FOR MIGRATION

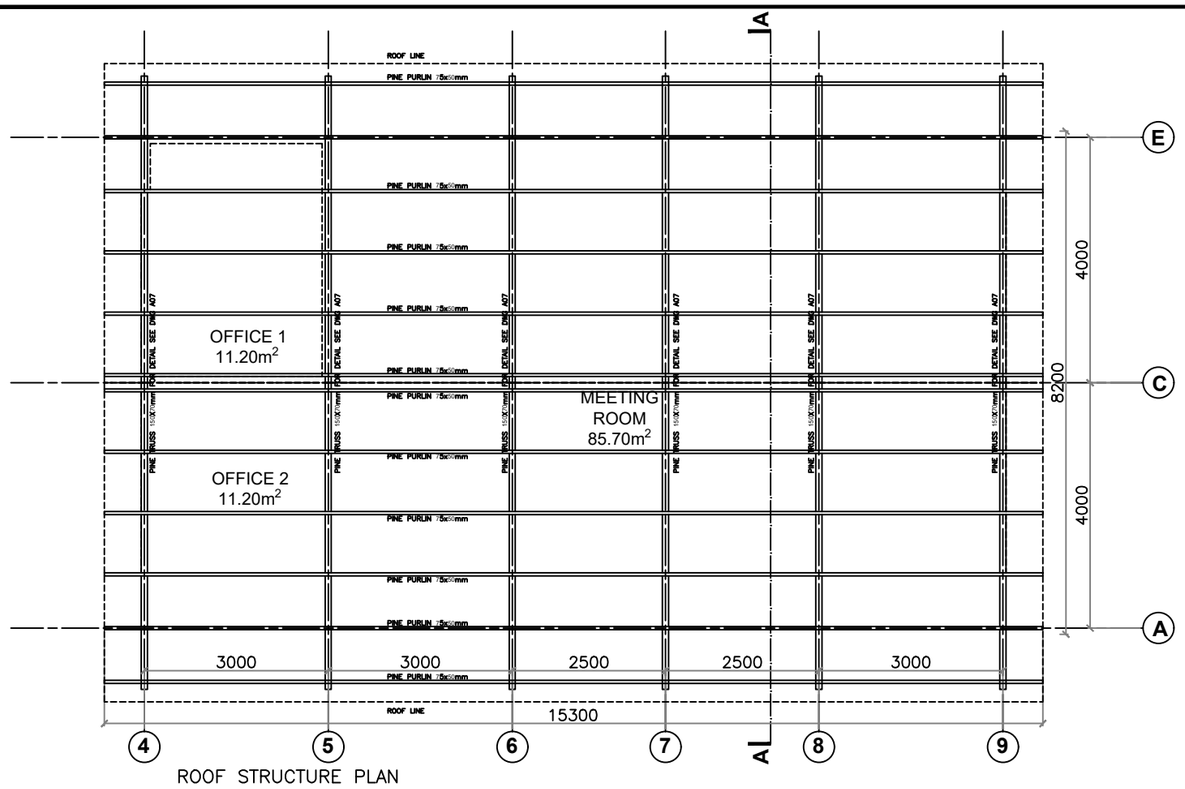

ROOF STRUCTURE PLAN

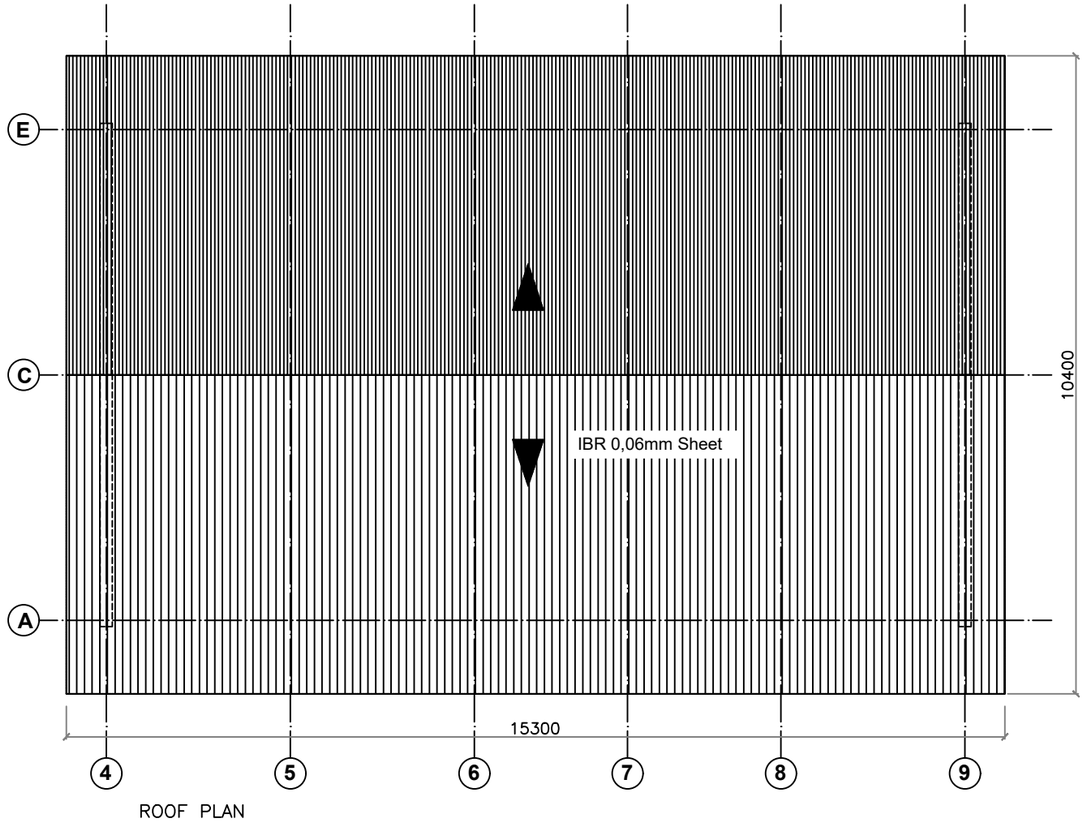

ROOF PLAN

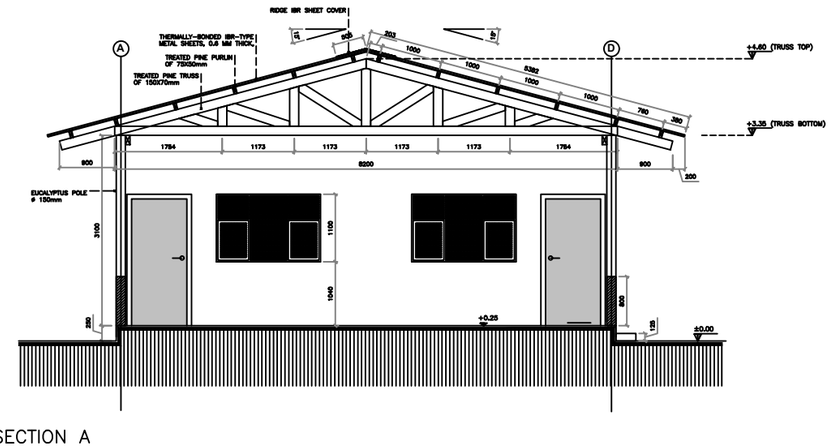

SECTION A

IOM UN MIGRATION

PROJECT AREA : COMMUNITY REVITALIZATION	CODE : CREU02
PROJECT NAME : **EU COMMUNITY CENTER**	
LOCATION: EU COMMUNITY - CABO DELGADO - MOZAMBIQUE	PHASE : Detail Design
TITLE : **MAIN BUILDING** ROOF STRUCTURE PLANS	Drawing: **A.05**
Registered:	Date : APRIL 2022 / Scale : 1:100

Note:

- All DIMENSION AND LEVELS ARE IN mm MUST BE VERIFIED AND CHECKED AT THE SITE
- THE DOCUMENT IS PRIVATE PROPERTY.ALL RIGHTS TITLE AND INTEREST, IN THIS DOCUMENT.INCLUDING ANY AND ALL COPYRIGHTS THEREIN, ARE OWNED BY IOM- INTERNACIONAL ORGANIZATION FOR MIGRATION

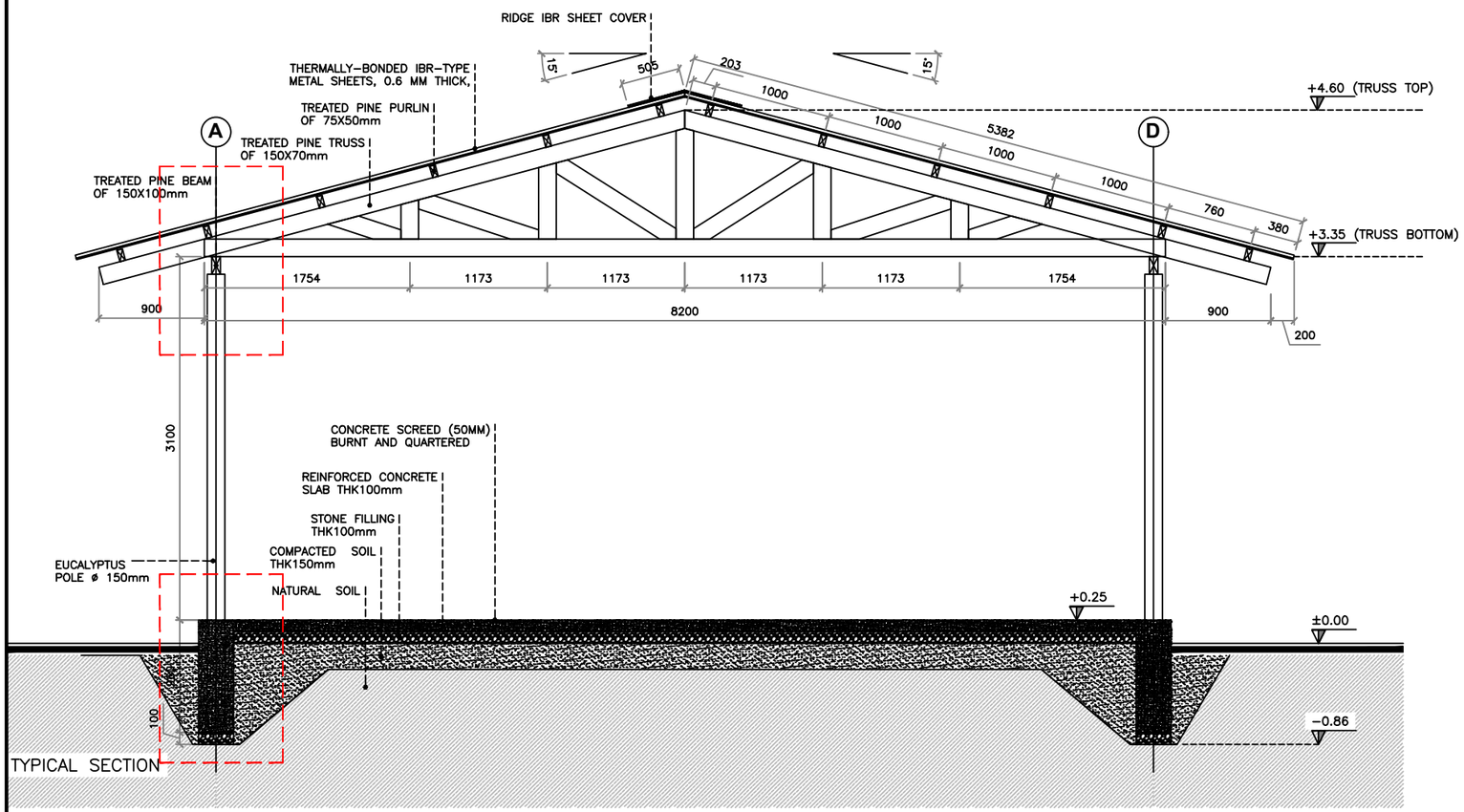

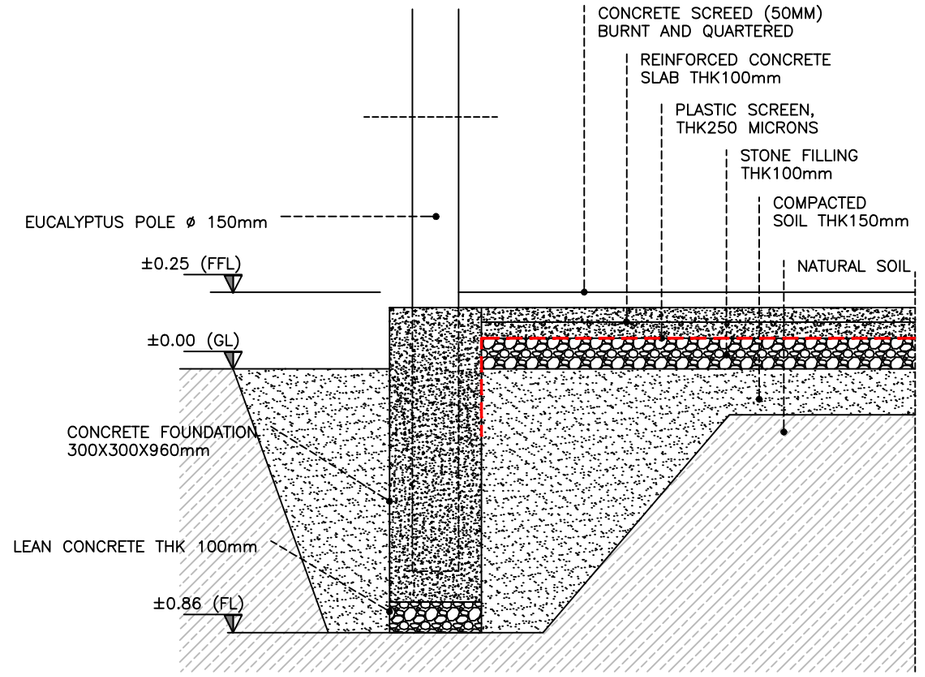

TYPICAL EUCALYPTUS COLUMN SECTION

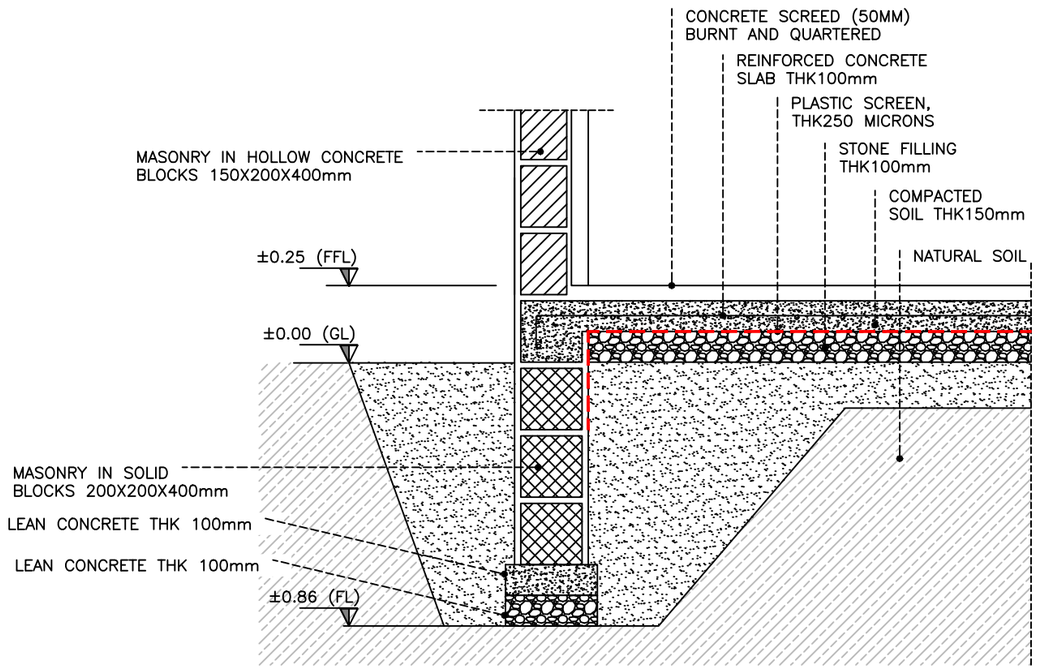

TYPICAL WALL SECTION

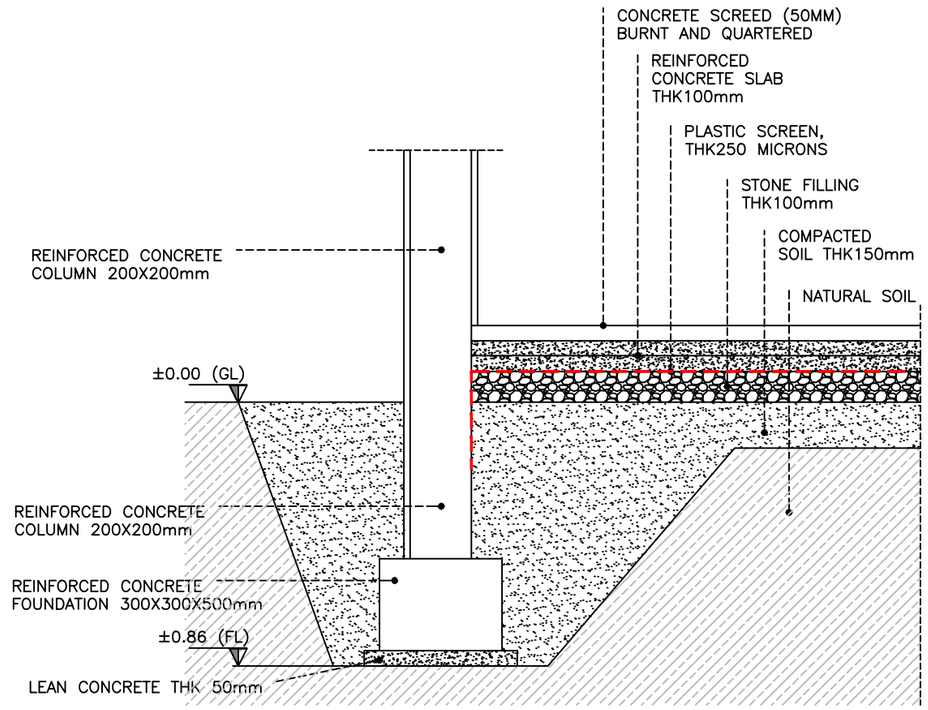

TYPICAL CONCRETE COLUMN SECTION

IOM UN MIGRATION

PROJECT AREA : COMMUNITY REVITALIZATION	CODE : CREU02
PROJECT NAME : **EU COMMUNITY CENTER**	
LOCATION: EU COMMUNITY - CABO DELGADO - MOZAMBIQUE	PHASE : Detail Design
TITLE : **MAIN BUILDING** FOUNDATION DATAILS	Drawing: **A.06**
Registered:	Date : APRIL 2022 / Scale : 1:20/1:50

Note:

- All DIMENSION AND LEVELS ARE IN mm MUST BE VERIFIED AND CHECKED AT THE SITE
- THE DOCUMENT IS PRIVATE PROPERTY.ALL RIGHTS TITLE AND INTEREST, IN THIS DOCUMENT.INCLUDING ANY AND ALL COPYRIGHTS THEREIN, ARE OWNED BY IOM- INTERNACIONAL ORGANIZATION FOR MIGRATION

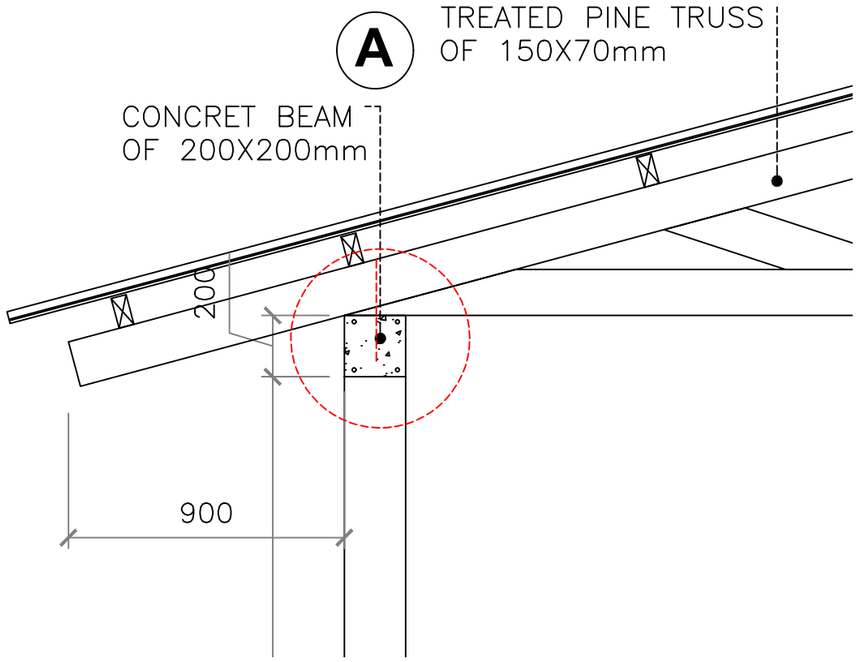

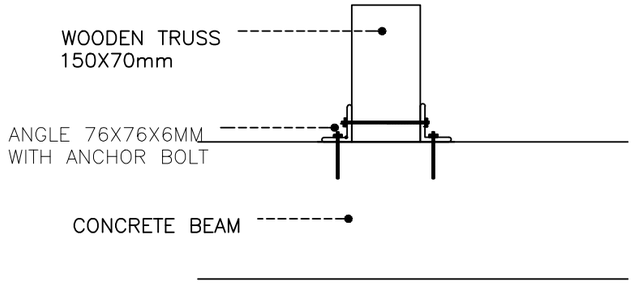

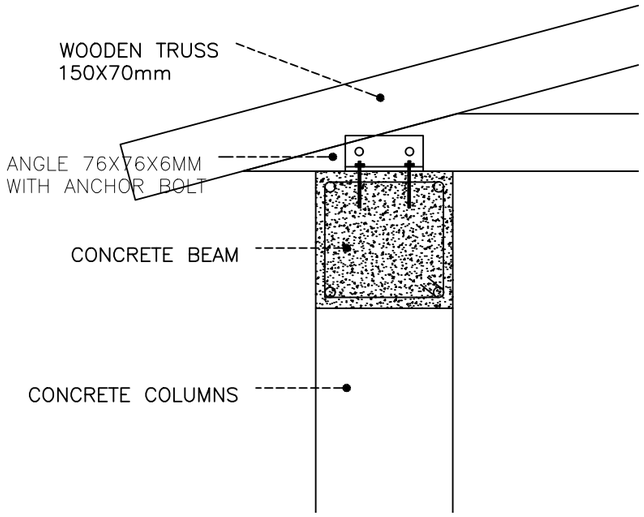

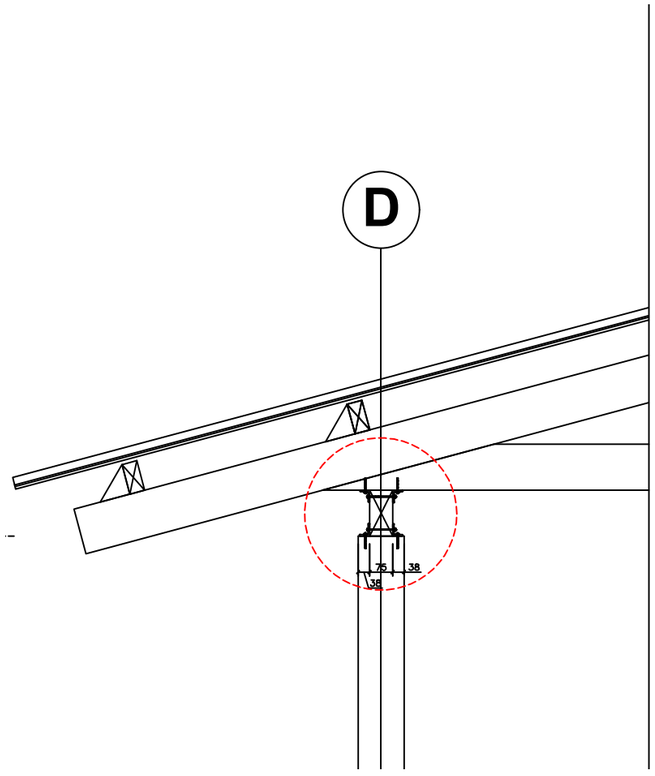

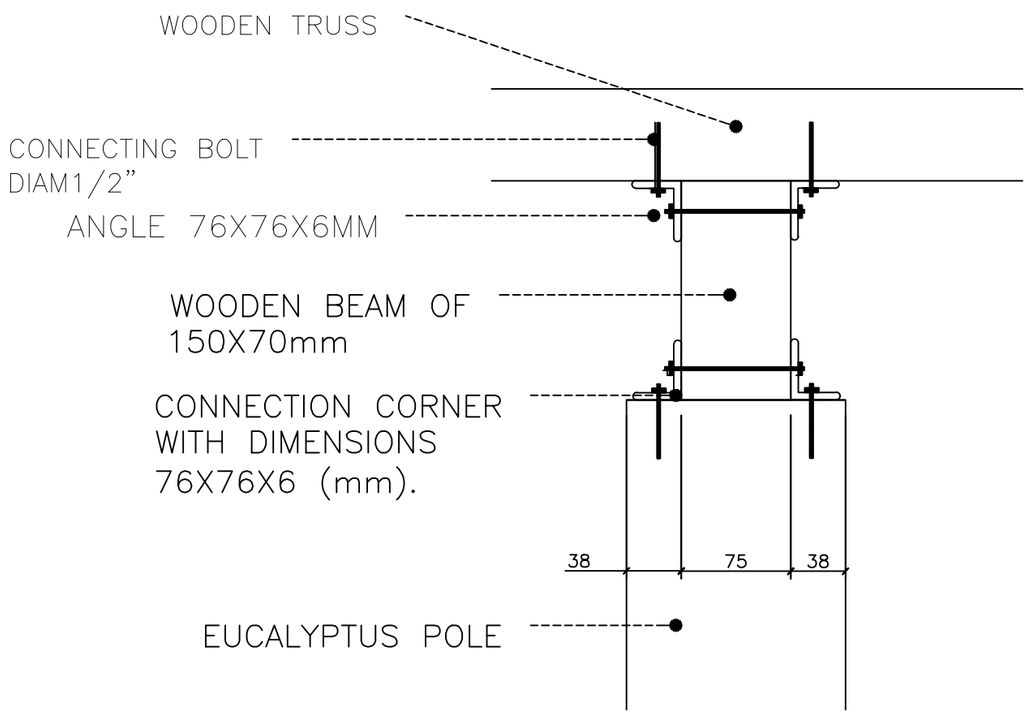

IOM
UN MIGRATION

PROJECT AREA : COMMUNITY REVITALIZATION	CODE : CREU02
PROJECT NAME : **EU COMMUNITY CENTER**	
LOCATION: EU COMMUNITY - CABO DELGADO - MOZAMBIQUE	PHASE : Detail Design
TITLE : **CONNECTIONS DETAILS** TRUSS AND COLUMNS	Drawing: **A.07**
Registered: / Date : APRIL 2022	Scale : 1:20/1:50

Note:

- All DIMENSION AND LEVELS ARE IN mm MUST BE VERIFIED AND CHECKED AT THE SITE
- THE DOCUMENT IS PRIVATE PROPERTY.ALL RIGHTS TITLE AND INTEREST, IN THIS DOCUMENT.INCLUDING ANY AND ALL COPYRIGHTS THEREIN, ARE OWNED BY IOM- INTERNACIONAL ORGANIZATION FOR MIGRATION

TRUSS

TRUSS (DESIGNATION)		DETAIL
LENGTH (mm)	8200	
HEIGHT (mm)	1250	
TOTAL IN BUILDING (un)	6	

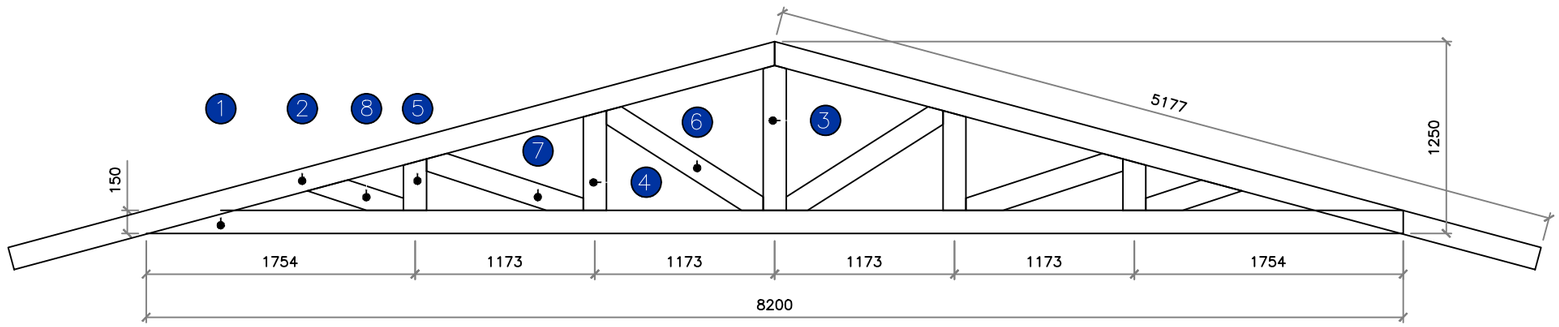

RAFTERS

RAFTER (DESIGNATION)	1	DETAIL
LENGTH (mm)	8200	
TOTAL IN TRUSS (un)	1	
TOTAL IN BUILDING (un)	6	

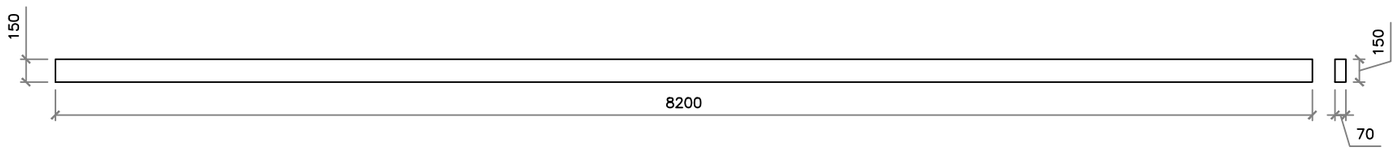

RAFTER (DESIGNATION)	2	DETAIL
LENGTH (mm)	5177	
TOTAL IN TRUSS (un)	2	
TOTAL IN BUILDING (un)	12	

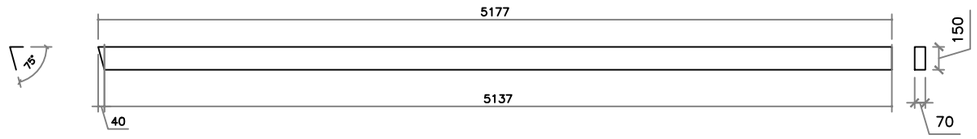

RACKS

RACKS (DESIGNATION)	3	4	5	6	7	8
DETAILS	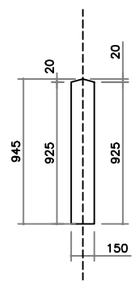	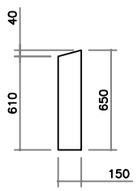	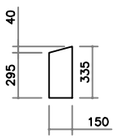	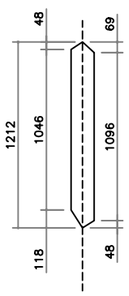	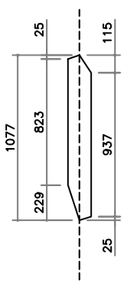	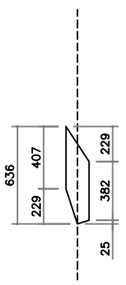
LENGTH (mm)	945	650	335	1212	1077	660
TOTAL IN TRUSS (un)	1	2	2	2	2	2
TOTAL IN BUILDING (un)	6	12	12	12	12	12

25.5m

IOM UN MIGRATION

PROJECT AREA : COMMUNITY REVITALIZATION	CODE : CREU02
PROJECT NAME : **EU COMMUNITY CENTER**	
LOCATION: EU COMMUNITY - CABO DELGADO - MOZAMBIQUE	PHASE : Detail Design
TITLE : **ROOF STRUCTURE** ROOF STRUCTURE DETAILS	Drawing: **A.08**
Registered:	Date : APRIL 2022 / Scale : 1:50/1:100

Note:

- All DIMENSION AND LEVELS ARE IN mm MUST BE VERIFIED AND CHECKED AT THE SITE
- THE DOCUMENT IS PRIVATE PROPERTY. ALL RIGHTS TITLE AND INTEREST, IN THIS DOCUMENT.INCLUDING ANY AND ALL COPYRIGHTS THEREIN, ARE OWNED BY IOM- INTERNACIONAL ORGANIZATION FOR MIGRATION

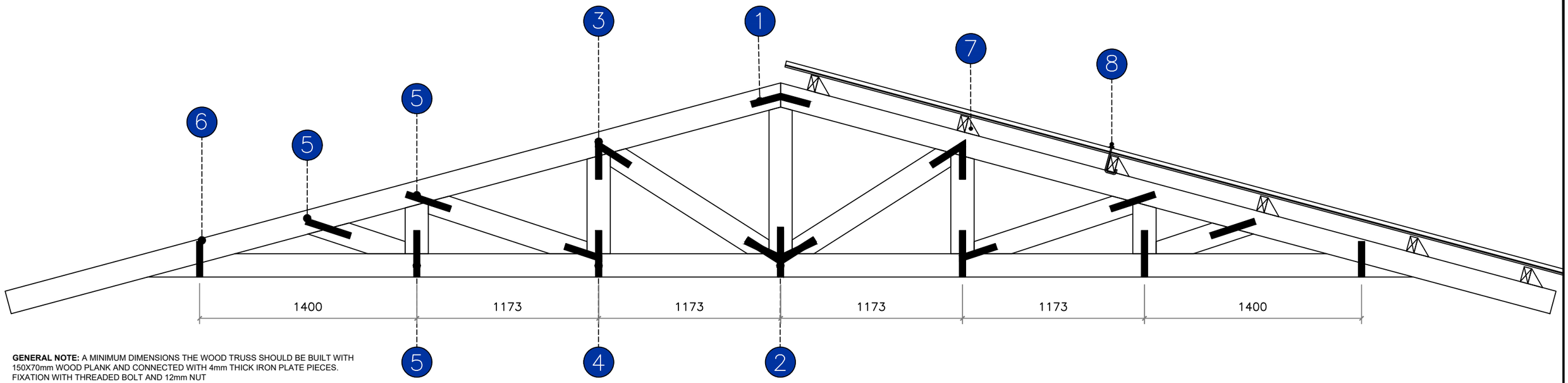

GENERAL NOTE: A MINIMUM DIMENSIONS THE WOOD TRUSS SHOULD BE BUILT WITH 150X70mm WOOD PLANK AND CONNECTED WITH 4mm THICK IRON PLATE PIECES. FIXATION WITH THREADED BOLT AND 12mm NUT

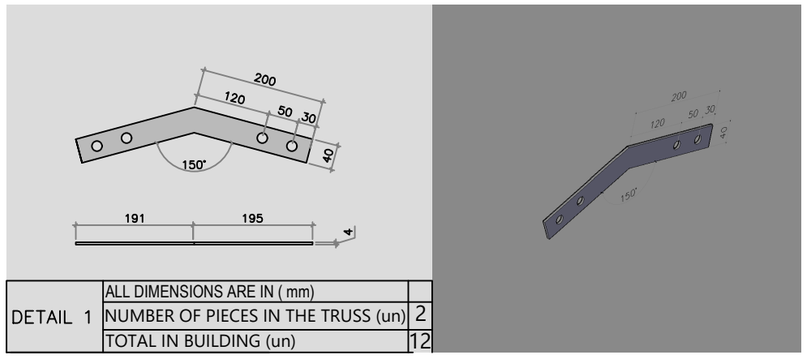

DETAIL 1	ALL DIMENSIONS ARE IN (mm)	
	NUMBER OF PIECES IN THE TRUSS (un)	2
	TOTAL IN BUILDING (un)	12

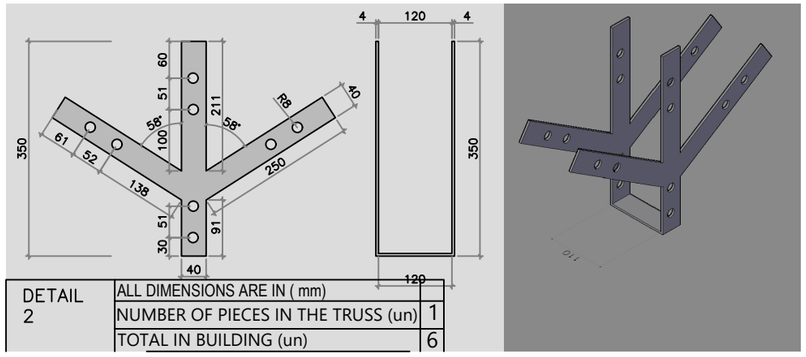

DETAIL 2	ALL DIMENSIONS ARE IN (mm)	
	NUMBER OF PIECES IN THE TRUSS (un)	1
	TOTAL IN BUILDING (un)	6

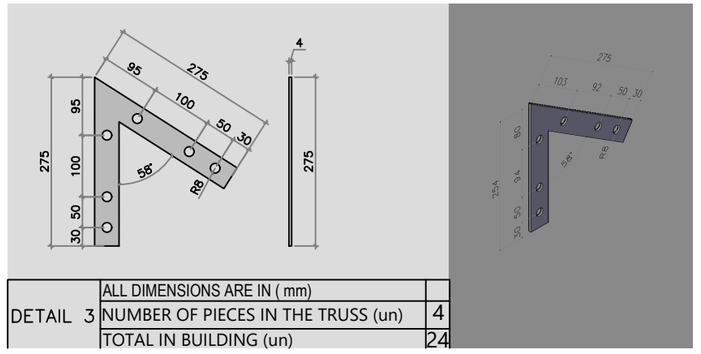

DETAIL 3	ALL DIMENSIONS ARE IN (mm)	
	NUMBER OF PIECES IN THE TRUSS (un)	4
	TOTAL IN BUILDING (un)	24

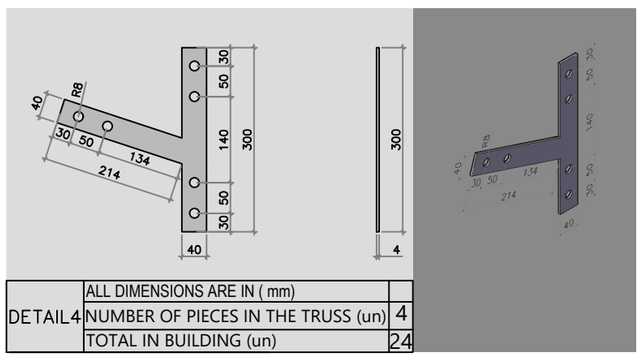

DETAIL4	ALL DIMENSIONS ARE IN (mm)	
	NUMBER OF PIECES IN THE TRUSS (un)	4
	TOTAL IN BUILDING (un)	24

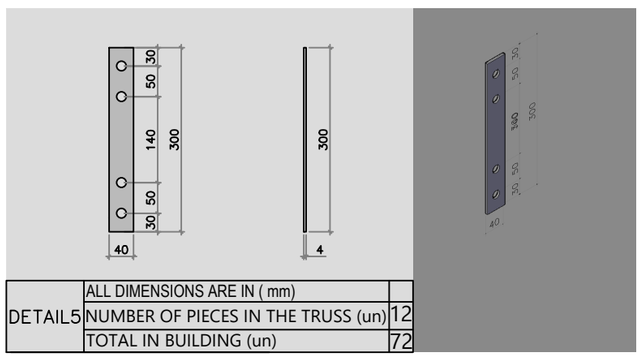

DETAIL5	ALL DIMENSIONS ARE IN (mm)	
	NUMBER OF PIECES IN THE TRUSS (un)	12
	TOTAL IN BUILDING (un)	72

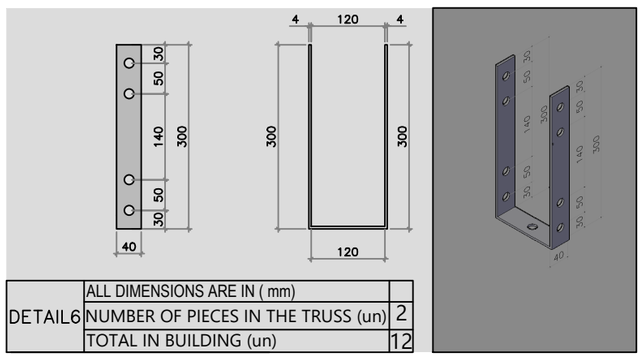

DETAIL6	ALL DIMENSIONS ARE IN (mm)	
	NUMBER OF PIECES IN THE TRUSS (un)	2
	TOTAL IN BUILDING (un)	12

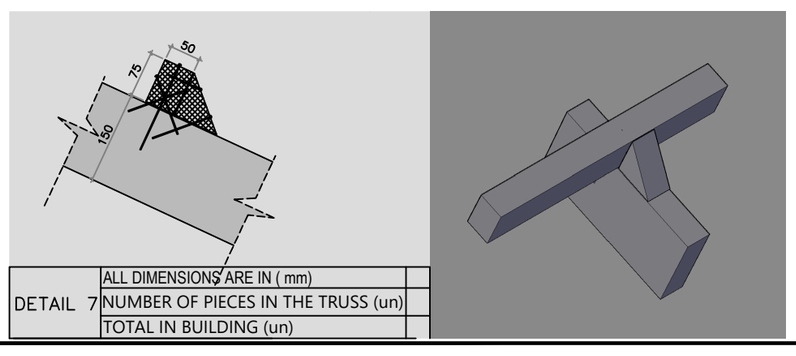

DETAIL 7	ALL DIMENSIONS ARE IN (mm)	
	NUMBER OF PIECES IN THE TRUSS (un)	
	TOTAL IN BUILDING (un)	

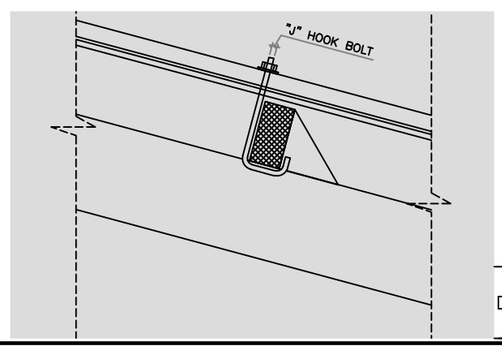

DETAIL8	ALL DIMENSIONS ARE IN (mm)	
	NUMBER OF PIECES IN THE TRUSS (un)	
	TOTAL IN BUILDING (un)	

IOM
UN MIGRATION

PROJECT AREA : COMMUNITY REVITALIZATION	CODE : CREU02
PROJECT NAME : **EU COMMUNITY CENTER**	
LOCATION: EU COMMUNITY - CABO DELGADO - MOZAMBIQUE	PHASE : Detail Design
TITLE : **ROOF STRUCTURE** CONECTIONS DETAILS	Drawing: **A.09**
Registered:	Date : APRIL 2022 / Scale : 1:50/1:100

Note:

- All DIMENSION AND LEVELS ARE IN mm MUST BE VERIFIED AND CHECKED AT THE SITE

- THE DOCUMENT IS PRIVATE PROPERTY.ALL RIGHTS TITLE AND INTEREST, IN THIS DOCUMENT.INCLUDING ANY AND ALL COPYRIGHTS THEREIN, ARE OWNED BY IOM- INTERNACIONAL ORGANIZATION FOR MIGRATION

DOOR (DESIGNATION)	D1
DETAILS	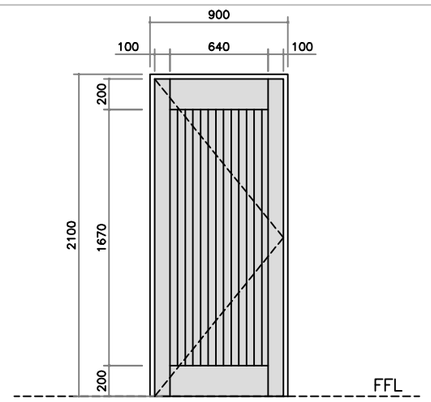
ROOM	OFFICE 1/OFFICE 2
DIMENSION	ARO/FRAME: 900X2100mm FOLHA/LEAF: 840X2070mm
MATERIAL	FIRST QUALITY CHAMFUTA HARDHOOD
DETAILS	DOBRADIÇA: EM LATÃO MACIÇO COM ANILHAS DUPLAS DO TIPO H032 100x75 HD DA "HMP" - 3 POR FOLHA HINGES: POLISHED BRASS DOUBLE WASHERS TYPE H032 100x75HD BY "HMP" – 3/LEAF ON DOOR CONJUNTO DE FECHADURA E MAÇANETA TIPO: YALE 4600 (LN) KNOB LOCKSET TYPE: YALE 4600 (LN) OR EQUIVALENT BATENTE DE PORTA DE PAVIMENTO FLOOR DOORS STOP ACABAMENTO: PINTURA A ESMALTE SOB PRIMARIO APROPRIADO FINISHING: ENAMEL PAINT ON UNDERCOAT
QTY	2

WINDOWS (DESIGNATION)	W1	W2
DETAILS	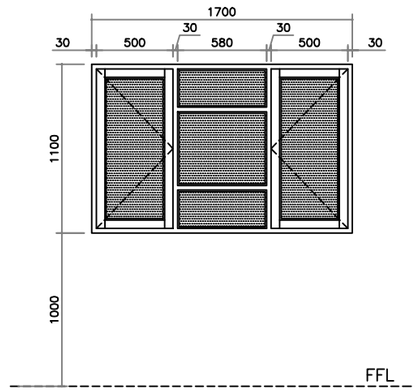	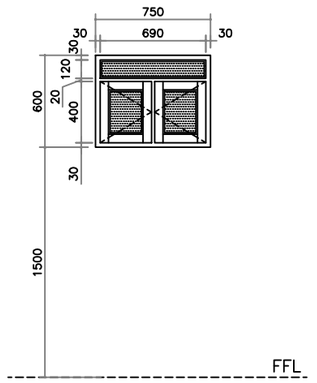
ROOM	OFFICE 1/OFFICE 2	OFFICE 1/OFFICE 2
DIMENSION	1700X1100	1200X2100
MATERIAL	FIRST QUALITY CHAMFUTA HARDHOOD	FIRST QUALITY CHAMFUTA HARDHOOD
DETAILS	GLASS: FLAT TRANSPARENT 4mm THICK *VIDRO: LISO TRANSPARENTE 4mm ESPESSURA* INSECT SCREEN: STAINLESS STEEL MESH *REDEMOSQUITEIRA: REDE EM ACO INOXIDAVEL* HINGES: POLISHED BRASS TYPE H023 75x47 "HMP" 2/LEAF (GLASS AND INSECT SCREEN) *DOBRADICA: EM LATAO DO TIPO H023 75x47 da "HMP" 2/FOLHA (VIDRO E REDE)* WINDOWS FITTINGS: POLISHED BRASS TYPE B2757 FROM "CONWAYS" 1/LEAF (GLASS AND INSECT SCREEN) *FECHOS: EM LATAO MACICO DO TIPO: B2757 DA CONWAYS 1/FOLHA (VIDRO E REDE)* STAYS: POLISHED BRASS TYPE B2764 FROM CONWAYS 1/GLASS LEAF *REGULADOR: EM LATAO MACICO DO TIPO: B2764 DA CONWAYS 1/FOLHA DE VIDRO* FINISHING: ENAMEL PAINT ON UNDERCOAT *ACABAMENTO: PINTURA ESMALTE SOB PRIMARIO*	GLASS: FLAT TRANSPARENT 4mm THICK *VIDRO: LISO TRANSPARENTE 4mm ESPESSURA* INSECT SCREEN: STAINLESS STEEL MESH *REDEMOSQUITEIRA: REDE EM ACO INOXIDAVEL* HINGES: POLISHED BRASS TYPE H023 75x47 "HMP" 2/LEAF (GLASS AND INSECT SCREEN) *DOBRADICA: EM LATAO DO TIPO H023 75x47 da "HMP" 2/FOLHA (VIDRO E REDE)* WINDOWS FITTINGS: POLISHED BRASS TYPE B2757 FROM "CONWAYS" 1/LEAF (GLASS AND INSECT SCREEN) *FECHOS: EM LATAO MACICO DO TIPO: B2757 DA CONWAYS 1/FOLHA (VIDRO E REDE)* STAYS: POLISHED BRASS TYPE B2764 FROM CONWAYS 1/GLASS LEAF *REGULADOR: EM LATAO MACICO DO TIPO: B2764 DA CONWAYS 1/FOLHA DE VIDRO* FINISHING: ENAMEL PAINT ON UNDERCOAT *ACABAMENTO: PINTURA ESMALTE SOB PRIMARIO*
QUANTITY	2	4

IOM UN MIGRATION

PROJECT AREA : COMMUNITY REVITALIZATION	CODE : CREU02
PROJECT NAME : **EU COMMUNITY CENTER**	
LOCATION: EU COMMUNITY - CABO DELGADO - MOZAMBIQUE	PHASE : Detail Design
TITLE : **ALL BUILDINGS** DOOR SCHEDULE	Drawing: **A.10**
Registered: / Date : APRIL 2022	Scale : 1:50

Note:

- All DIMENSION AND LEVELS ARE IN mm MUST BE VERIFIED AND CHECKED AT THE SITE
- THE DOCUMENT IS PRIVATE PROPERTY.ALL RIGHTS TITLE AND INTEREST, IN THIS DOCUMENT.INCLUDING ANY AND ALL COPYRIGHTS THEREIN, ARE OWNED BY IOM- INTERNACIONAL ORGANIZATION FOR MIGRATION